HVDC Grid : from actuators distributed control to global stability of the network

Dr. A. Benchaib

Hycon2 workshop, Brussels, 03 & 04 September 2012

GRID

ALSTOM

Plan

Recalls – AC Network

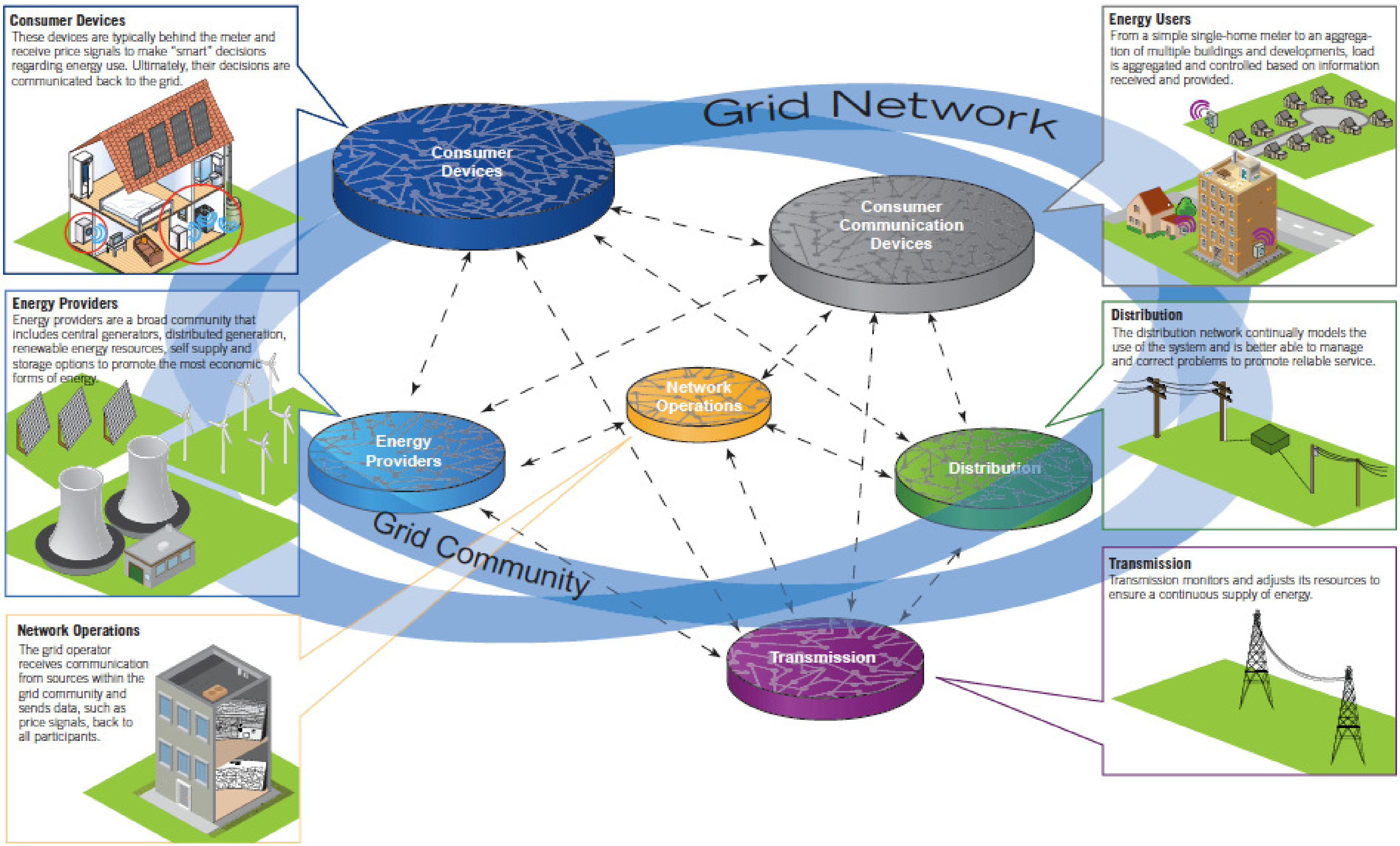

Consumer Devices
These devices are typically behind the meter and receive price signals to make "smart" decisions regarding energy use. Ultimately, their decisions are communicated back to the grid.

Energy Providers
Energy providers are a broad community that includes central generators, distributed generation, renewable energy resources, self supply and storage options to promote the most economic forms of energy.

Network Operations
The grid operator receives communication from sources within the grid community and sends data, such as price signals, back to all participants.

Energy Users
From a simple single-home meter to an aggregation of multiple buildings and developments, load is aggregated and controlled based on information received and provided.

Distribution
The distribution network continually models the use of the system and is better able to manage and correct problems to promote reliable service.

Transmission
Transmission monitors and adjusts its resources to ensure a continuous supply of energy.

GRID | ALSTOM

AC Network - Stability

Reliability is Maintained by Keeping Power in Balance

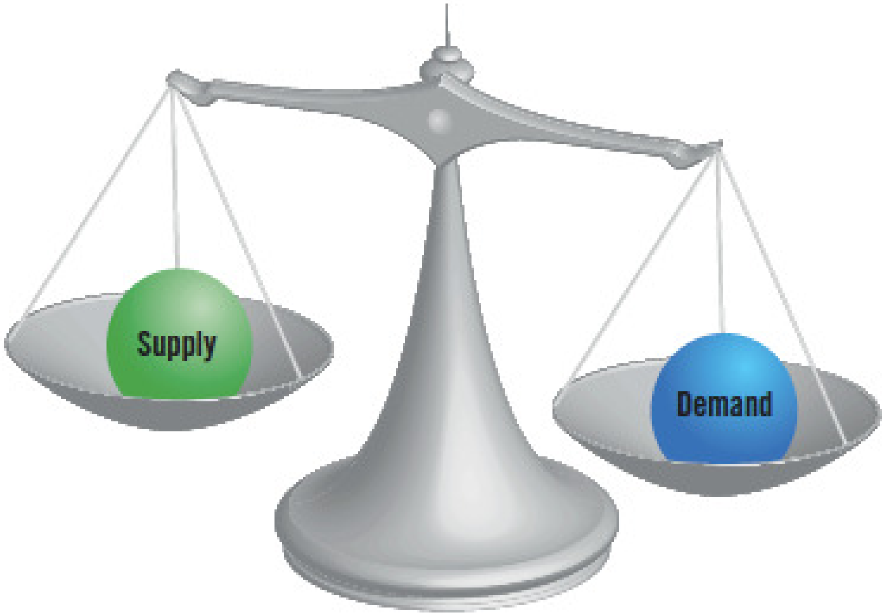

Reliability in Historic Grid Operations

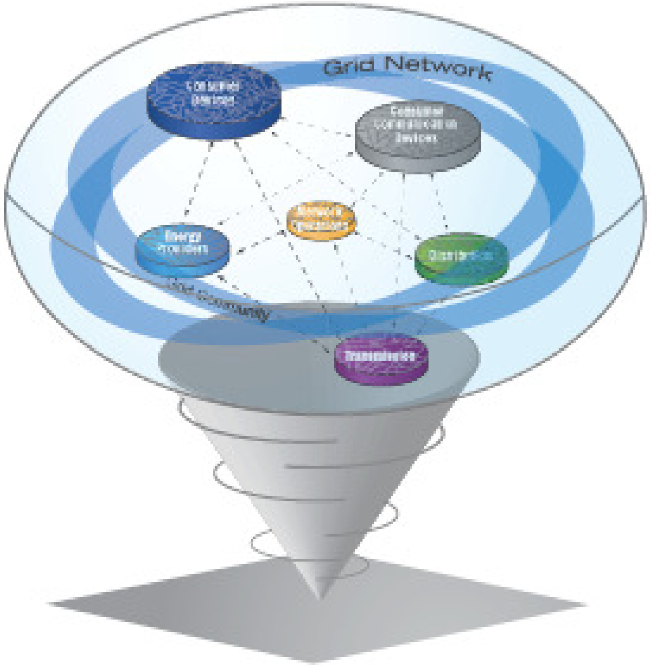

Reliability in Future Grid Operations

Courtesy of PJM

GRID | ALSTOM

AC Network – Stability – Working to its limits - Blackout

Losses: 61,800 MW
Persons: 50 millions
Duration: up to 2 days

Losses: 20,000 MW
Persons: 57 millions
Duration: 2 hours

USA, 14 August 2003

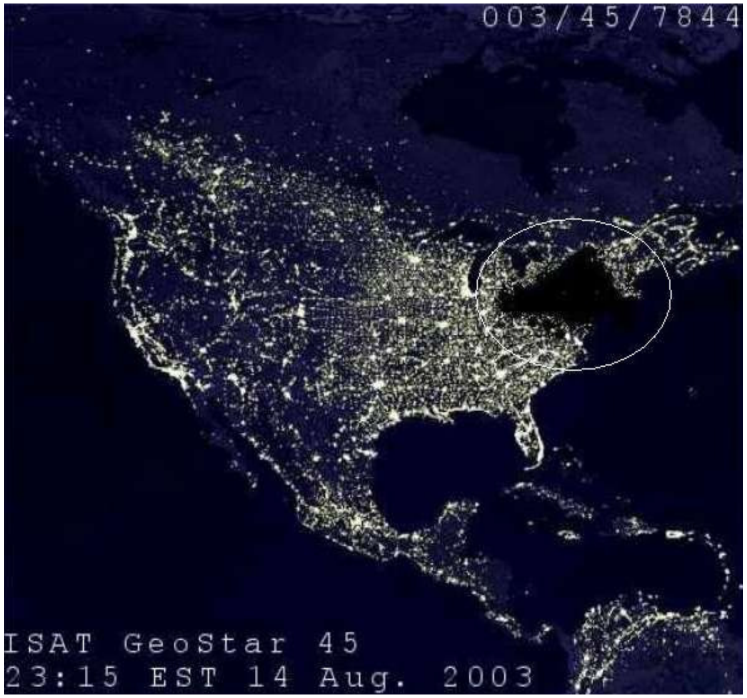

Italy, 28 September 2003

Source CRE

GRID ALSTOM

AC Network – Stability – Frequency issue

November 4th, 2006

🟧 Area 1 under-frequency
🟩 Area 2 over-frequency
🟦 Area 3 under-frequency

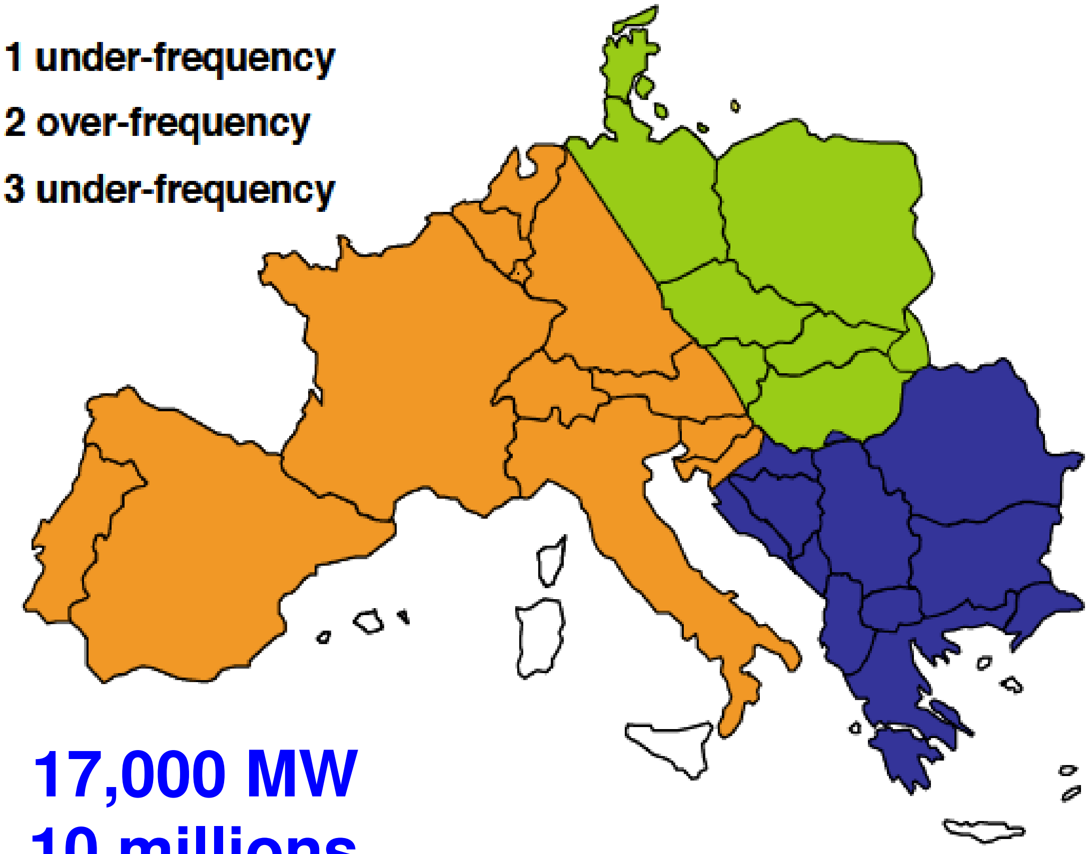

51 Hz

49 Hz

49.7 Hz

Losses: 17,000 MW
Persons: 10 millions
Duration: 2 hours

Courtesy of UCTE

AC Network – Stability – Frequency issue

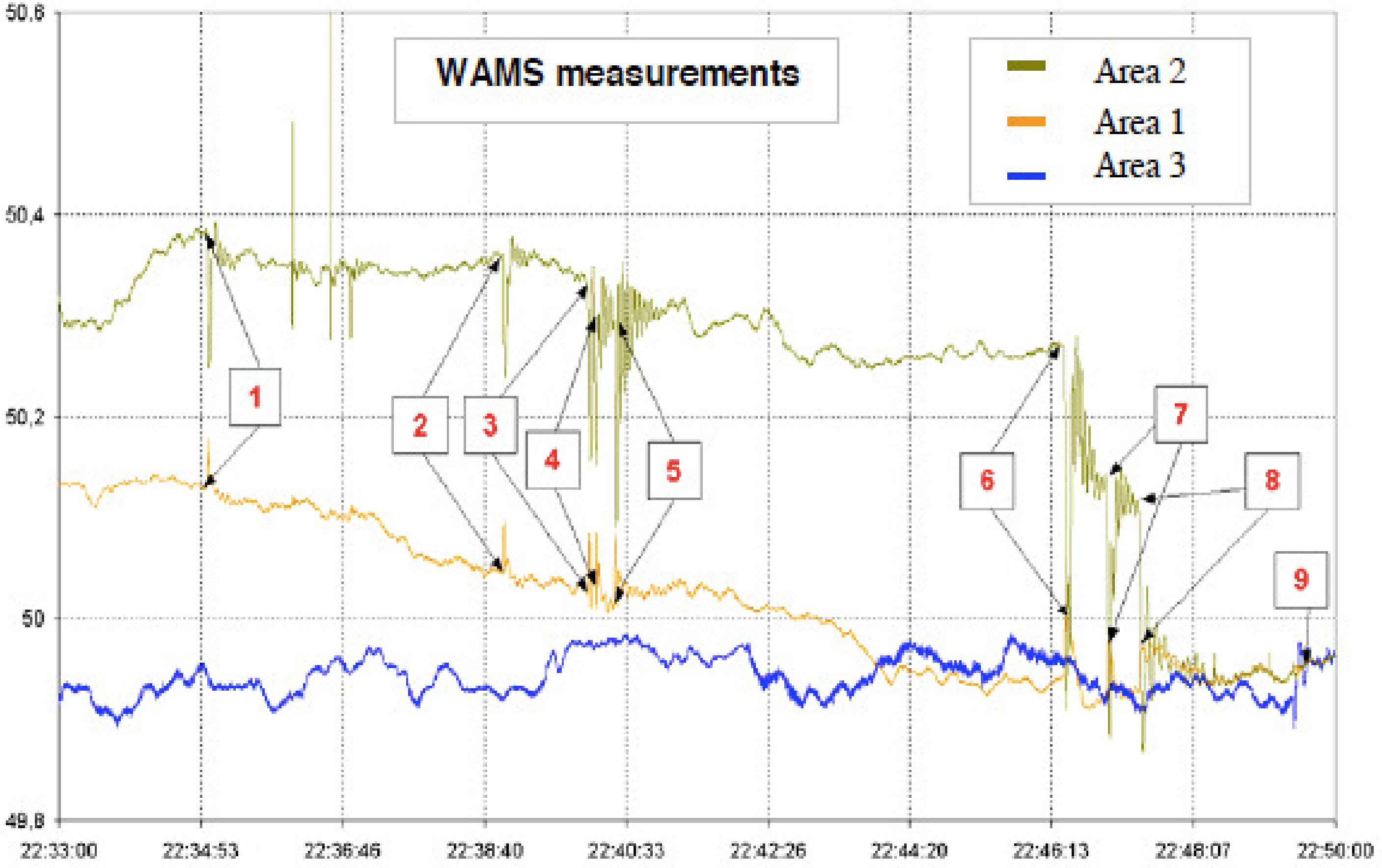

Resynchronization process – Reclosing attempts

Courtesy of UCTE

GRID ALSTOM

Plan

More Energy consumption = More Production (RES)

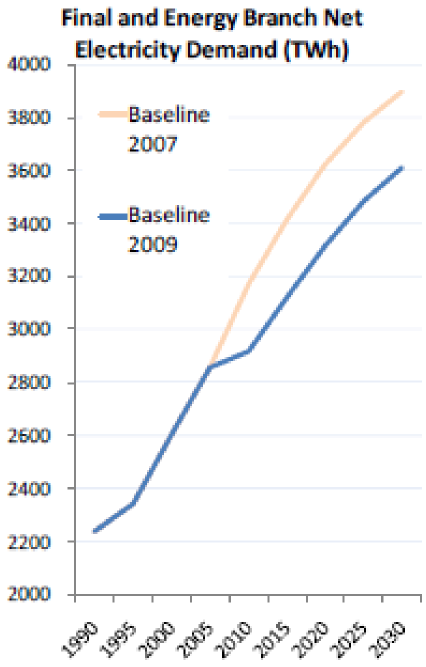
Final and Energy Branch Net Electricity Demand (TWh)

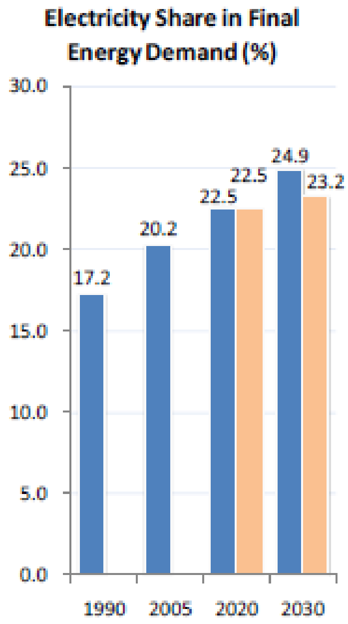
Electricity Share in Final Energy Demand (%)

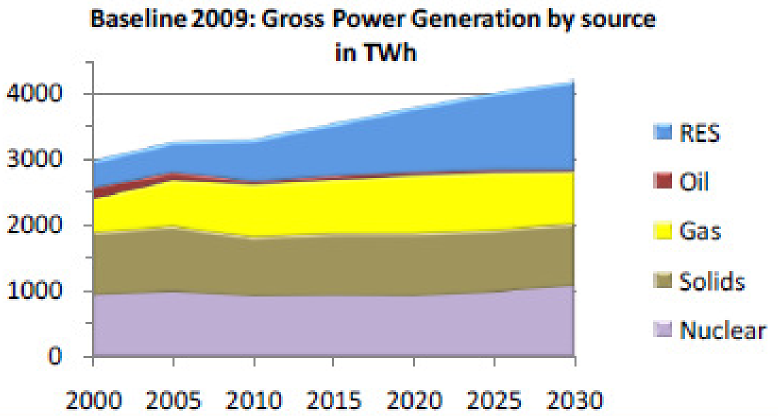
Baseline 2009: Gross Power Generation by source in TWh

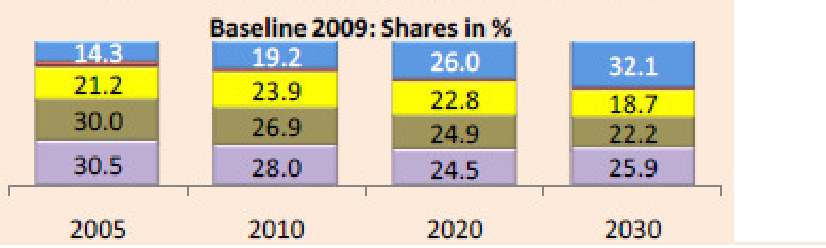
Baseline 2009: Shares in %

The Baseline scenario determines the development of the EU energy system under current trends and policies; it includes current trends on population and economic development including the recent economic downturn and takes into account the highly volatile energy import price environment of recent years. **EU ENERGY TRENDS TO 2030**

More Energy consumption = More Production (RES)

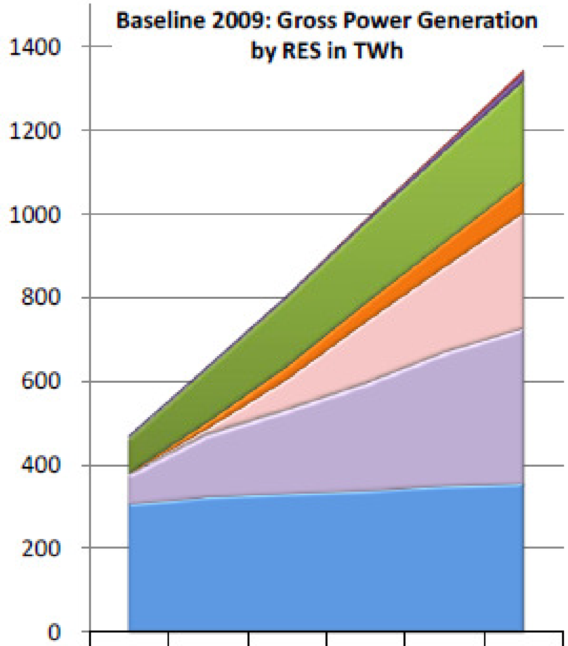

	2005	2010	2015	2020	2025	2030
🟥 Tidal, etc.	0	0	1	3	6	9
🟪 Geothermal	5	6	6	7	11	19
🟩 Biomass/waste	84	127	164	191	218	241
🟧 Solar	1	17	32	46	60	75
▨ Wind offshore	2	14	72	146	204	276
▨ Wind onshore	68	147	197	253	316	368
🟦 Hydro	307	323	332	339	349	355

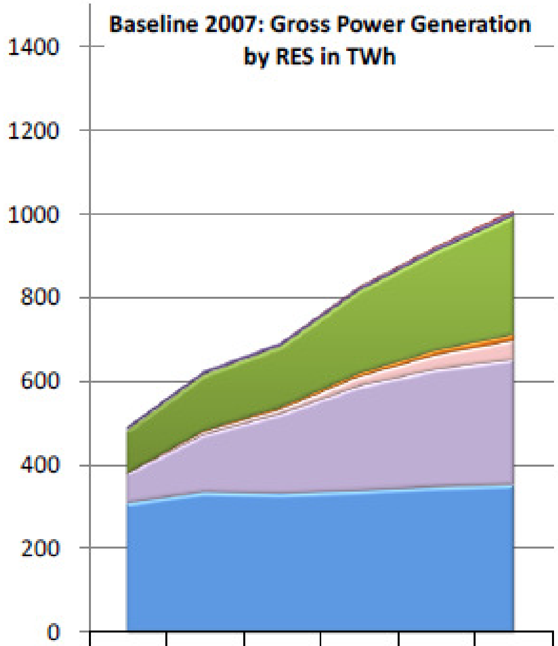

	2005	2010	2015	2020	2025	2030
🟥 Tidal, etc.	0	0	0	2	3	5
🟪 Geothermal	8	8	8	8	9	9
🟩 Biomass/waste	102	133	145	196	235	282
🟧 Solar	1	4	6	9	13	17
▨ Wind offshore	0	9	13	24	36	46
▨ Wind onshore	70	136	189	247	279	296
🟦 Hydro	307	333	329	336	345	351

AC Network - towards more constraints on wind penetration

Power quality

- Flicker
- Harmonics

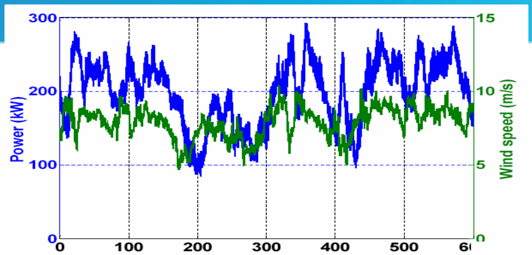

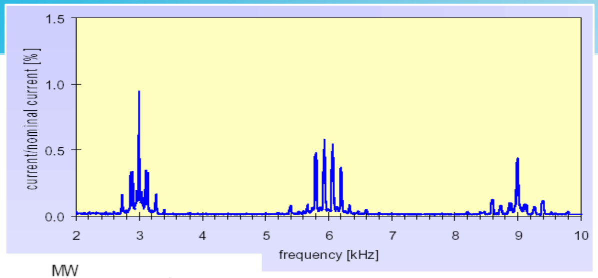

Reactive power control

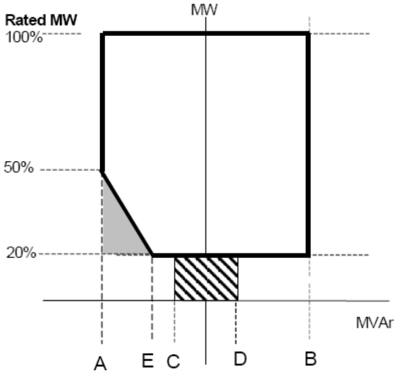

Low voltage ride through

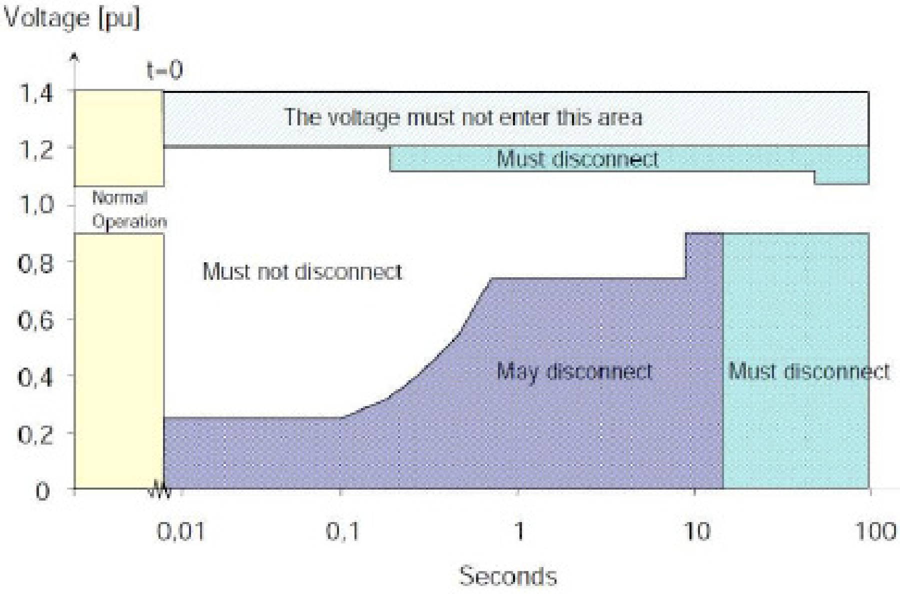

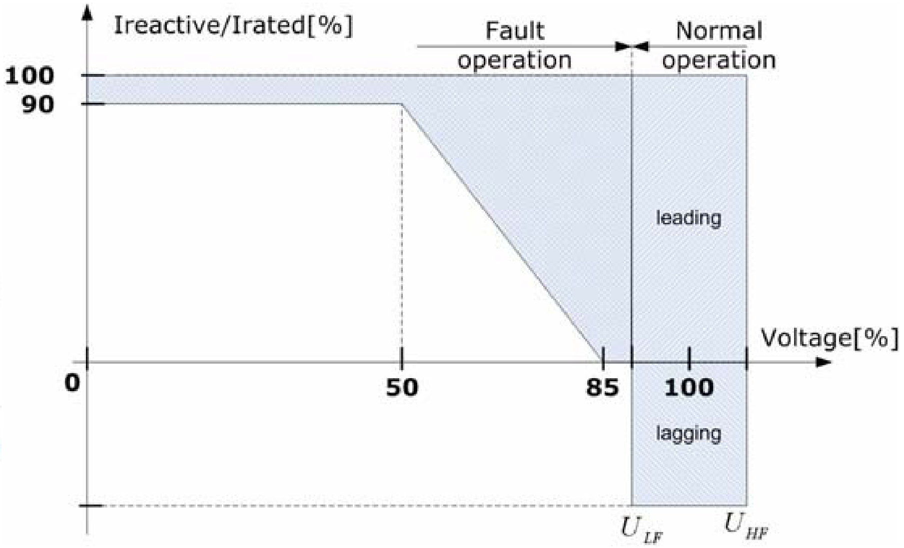

AC Network - towards more constraints on wind penetration

	Connection Management	Reactive Power Management	Fault Ride Through	Active Power Management	WT Modeling	Communication & External control
Advanced	Active anti-islanding; torsional, others	Zero power Voltage Control STATCOM & SVC	Zero Voltage LVRT with Current injection PO.12.3	Reserve functions EnergiNet	Detailed and proven	High amount of data for WF management & forecastings
	Anti-islanding	Voltage Control	Zero Voltage LVRT NGC	Frequency response		
			LVRT no trip ENEL	Curtailment E.On	Generic	
Basic	O/U Voltage Over Current O/U frequency	Power factor Control	None	None	None	None

- Single WTs
- Large Wind Farm
- Multiple WF

- Low penetration
- High penetration

AC Network - towards more constraints on PV penetration

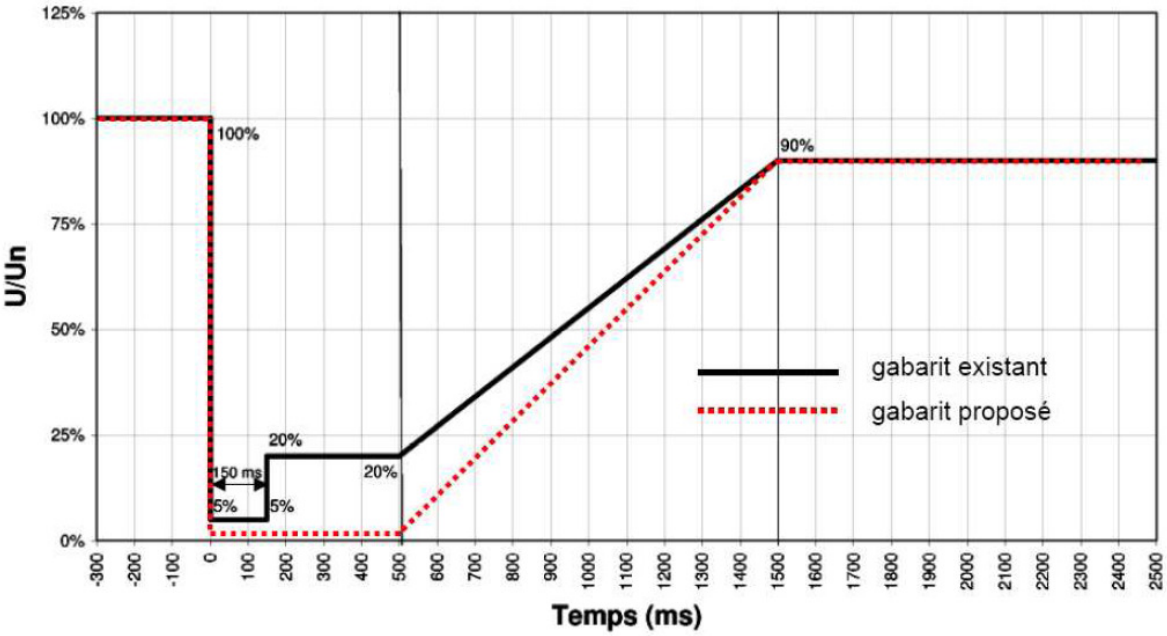

Lower threshold of the voltage from 0.05 p.u. to 0.01 p.u. Capacity of the electrical system to support a loss of PV during several hundreds of ms ➠ One solution to improve the network stability

Adding more and more constraints on RES integration is it a viable solution for power transmission and distribution of the future ?

More production (RES) - More players - Smart Grid

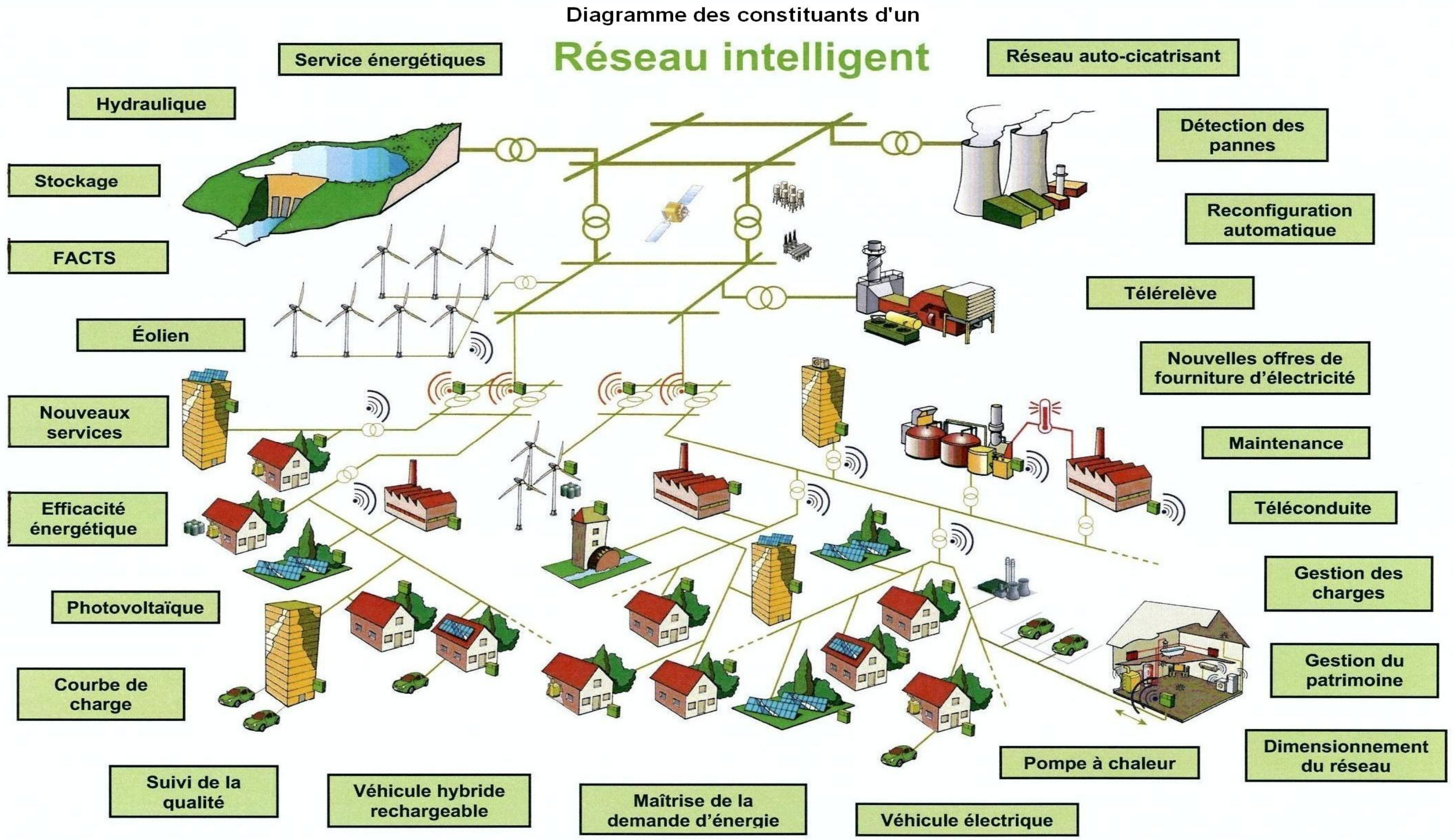

Source : CRE - Décembre 2009

Is it sufficient to make the AC grid smarter?

Plan

GRID | ALSTOM

AC Network & DC grid - towards more RES penetration

A Sample of European Proposals

G. Asplund, B. Jacobson, B. Berggren, K. Lindén ”Continental Overlay HVDC-Grid”, Cigré conference, B4-109, Paris, 2010

New motorways for energy transmission ➔ DC Networks

DC Energy will become a reality: It will develop 2 ways

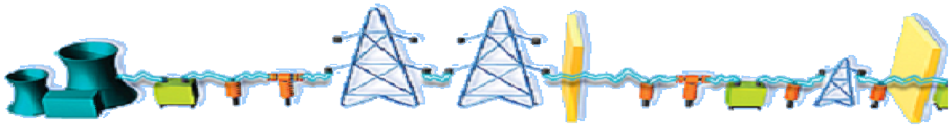

- **Supergrid** can also be referenced as **“Mega-Grid”** or **“Electrical -Highway”** or **“Super-Highway”** or **“Hypergrid”** or etc **…**

TOP – DOWN

The Supergrid : trade high volume of electricity across long distances.

Traditional way for Utilities

- Integration of off-shore renewables farms
- Integration of centralized storage
- Increased stability and quality issues
- New interconnections
- Demand-offer management

BOTTOM – UP

The adjacent Smartgrid: Anticipated way for mass consumer driven market

- Captive renewables
- Distributed storage
- E-Cars
- Mass transit systems
- “Urban Grid”

2020 vision: Supergrid & Adjacent Smartgrid

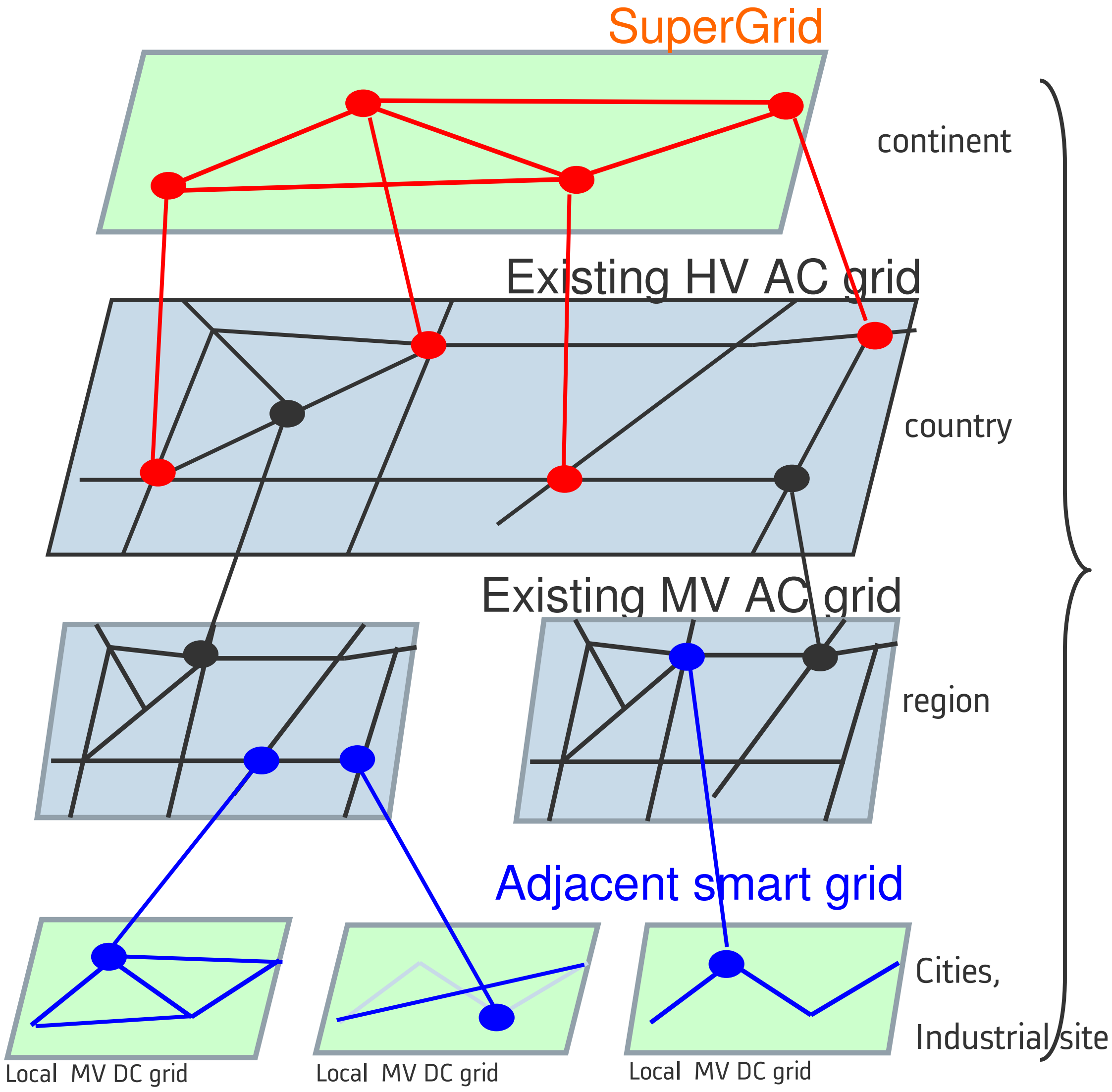

Superimposed layers

SuperGrid

- ▶Meshed DC Grid
- ▶Redundant lines
- ▶Converters only at interface between AC and DC grids

⇨ Reduced Losses

Adjacent smartgrid

- ▶Local DC loops
- ▶DC/DC converters to connect renewable, storage & loads in local loops and DC/AC converters at interface between AC and DC grids

⇨ Reduced Losses

2030 vision: AC & DC Hybrid Power Network

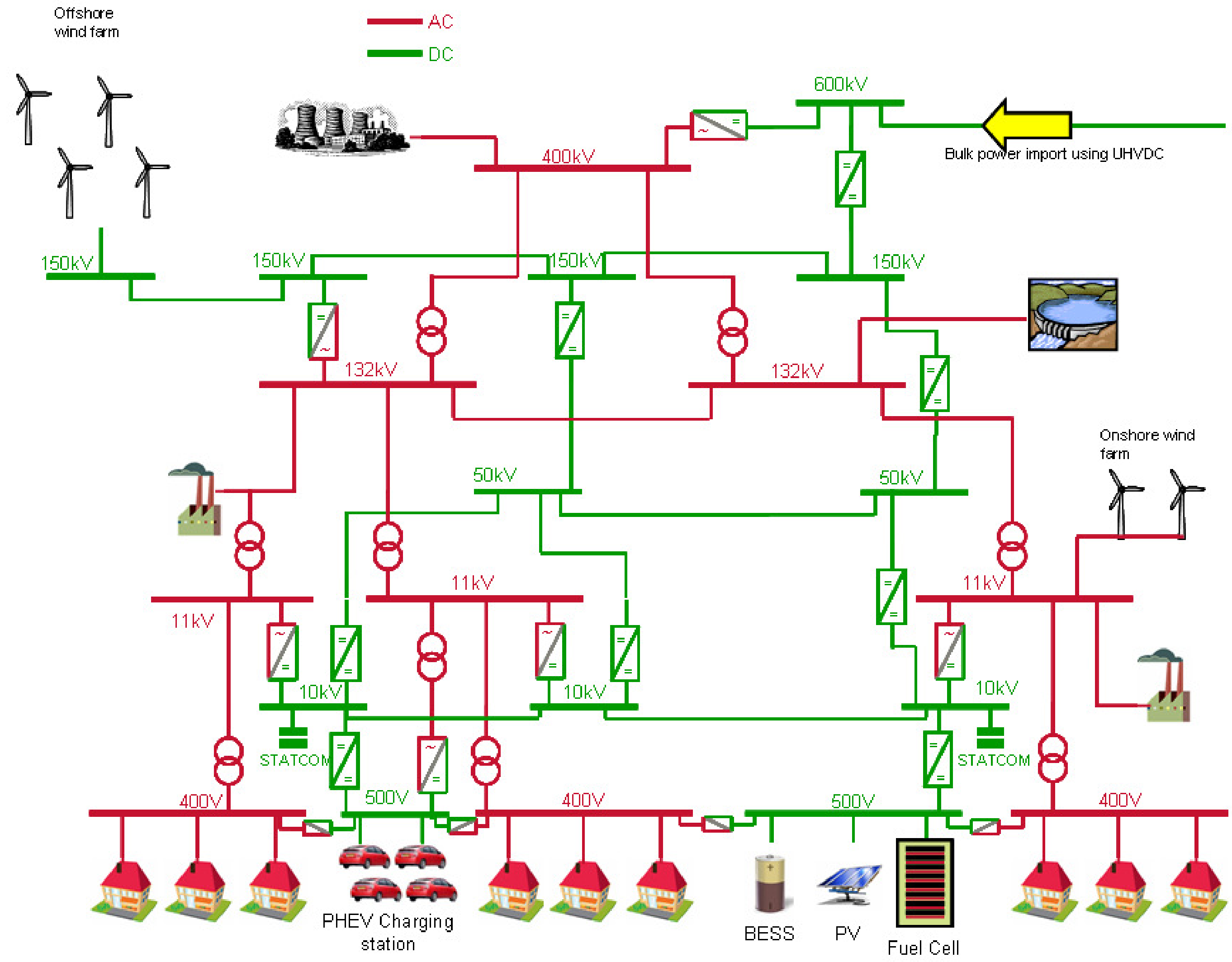

HVDC Grid 2020

DC Grid 2030

MPDC Grid 2020

AC Network & DC grid - towards more RES penetration

AC network →

Active Power ⇒ Network Frequency

Reactive Power ⇒ Voltage

Reduced Margin of stability

DC network →

Active Power ⇒ Voltage

Depending on the used technologies Increased stability Margin – protection issue

DC grid can act as mass storage system (with distributed small storage systems)

Do we need mass-storage systems?

Plan

VSC-HVDC: Problem formulation

VSC-HVDC Transmission Structure

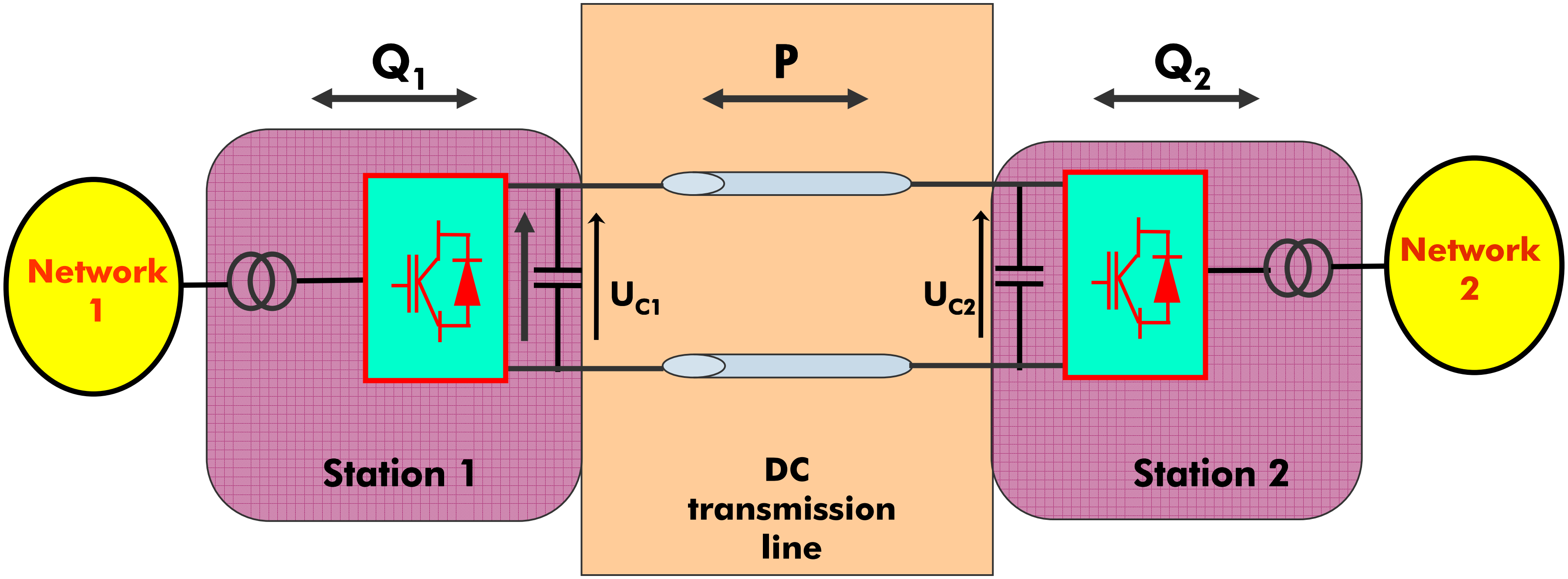

VSC-HVDC: Problem formulation

Control objectives

Station 1 → Reactive Power Q_1; DC-Bus voltage U_{C1}

Station 2 → Reactive Power Q_2; Active Power P

Main assumptions

- Balanced three-phase network
- Rotating reference frame (d,q) synchronized (Using PLL)
- Station 1 & 2 are ideal VSC 4-quadrants actuators

VSC-HVDC: Continuous-time equivalent model

Continuous-time equivalent model

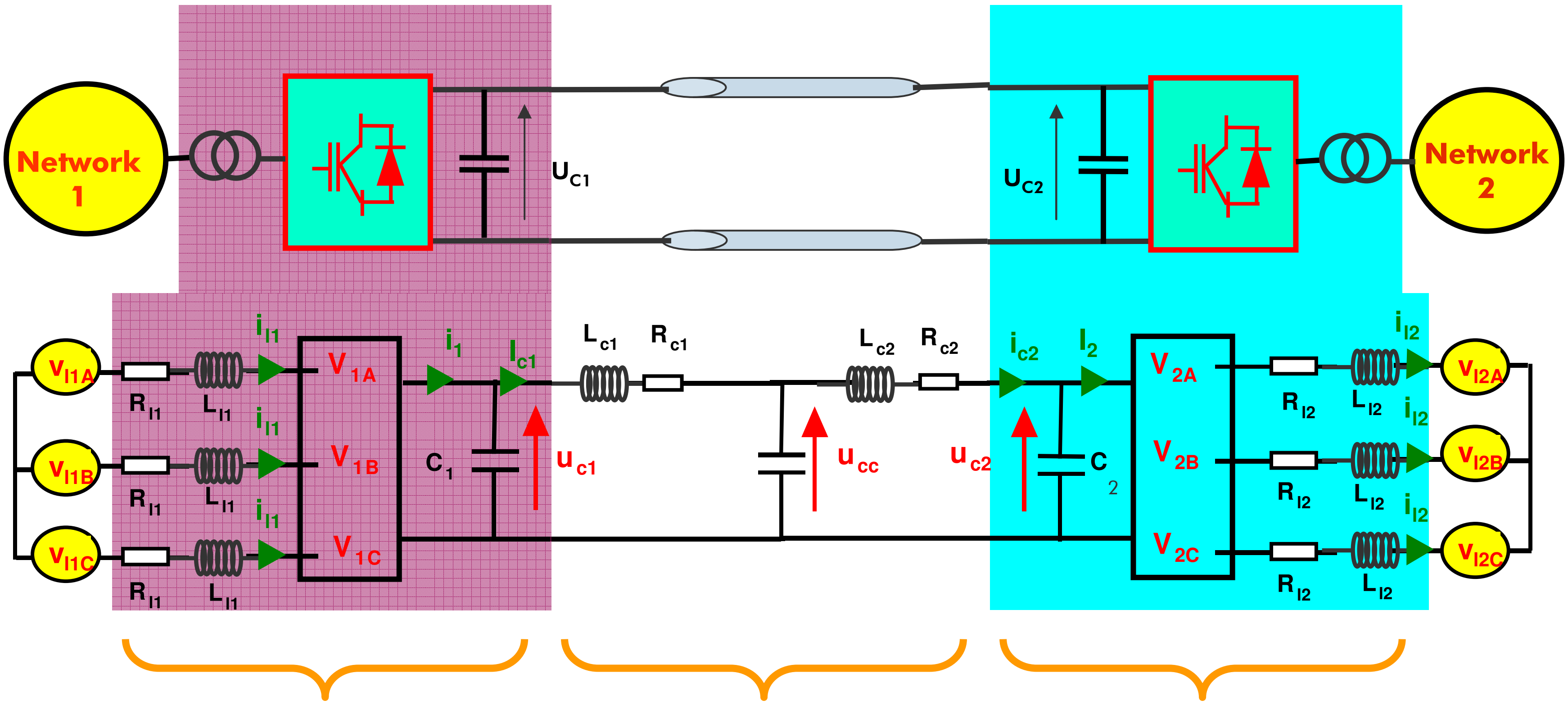

Station 1 Nonlinear model

DC-Cable Linear model

Station 2 Nonlinear model

VSC-HVDC: Continuous-time equivalent model

Continuous-time equivalent model (station1)

$$\begin{cases} \dfrac{d}{dt} i_{l1d} = -\dfrac{R_{l1}}{L_{l1}} i_{l1d} + \omega_1 i_{l1q} + \dfrac{1}{L_{l1}} v_{l1d} - \dfrac{1}{L_{l1}} \dfrac{u_{c1}}{2} v_{1dw} \\ \dfrac{d}{dt} i_{l1q} = -\dfrac{R_{l1}}{L_{l1}} i_{l1q} - \omega_1 i_{l1d} + \dfrac{1}{L_{l1}} v_{l1q} - \dfrac{1}{L_{l1}} \dfrac{u_{c1}}{2} v_{1qw} \\ \dfrac{d}{dt} u_{c1} = -\dfrac{1}{C_1} i_{c1} + \dfrac{1}{C_1} \dfrac{3}{4} \left(v_{1dw} i_{l1d} + v_{1qw} i_{l1q} \right) \end{cases}$$

Nonlinear model ⇨ $\dot{\boldsymbol{x}} = [\boldsymbol{A}]\boldsymbol{x} + \boldsymbol{g}(\boldsymbol{X})\boldsymbol{u} + [\boldsymbol{R}]\boldsymbol{z}$

$$x = \begin{bmatrix} i_{l1d} & i_{l1q} & u_{c1} \end{bmatrix}^T, \quad u = \begin{bmatrix} v_{1dw} & v_{1qw} \end{bmatrix}^T, \quad z = \begin{bmatrix} v_{l1d} & v_{l1q} & i_{c1} \end{bmatrix}^T$$

VSC-HVDC: Control structure (Station 1)

Control objectives

I_{l1d} and I_{l1q} has to follow a varying references

Tracking problem:

- **I_{l1dref}: Uc1 controller output**
- **I_{l1qref}: Function of Q_{1ref}**

Uc1 has to be maintained at a set point

Regulation problem

The model can be seen as a connection of two subsystems

$$x_1 = \begin{bmatrix} i_{1ld} & i_{1lq} \end{bmatrix}^T$$

Fast dynamics

$$x_2 = u_{c1}$$

Slow dynamics

Two scales of time

VSC-HVDC: Control structure (Station 1)

Control Philosophy

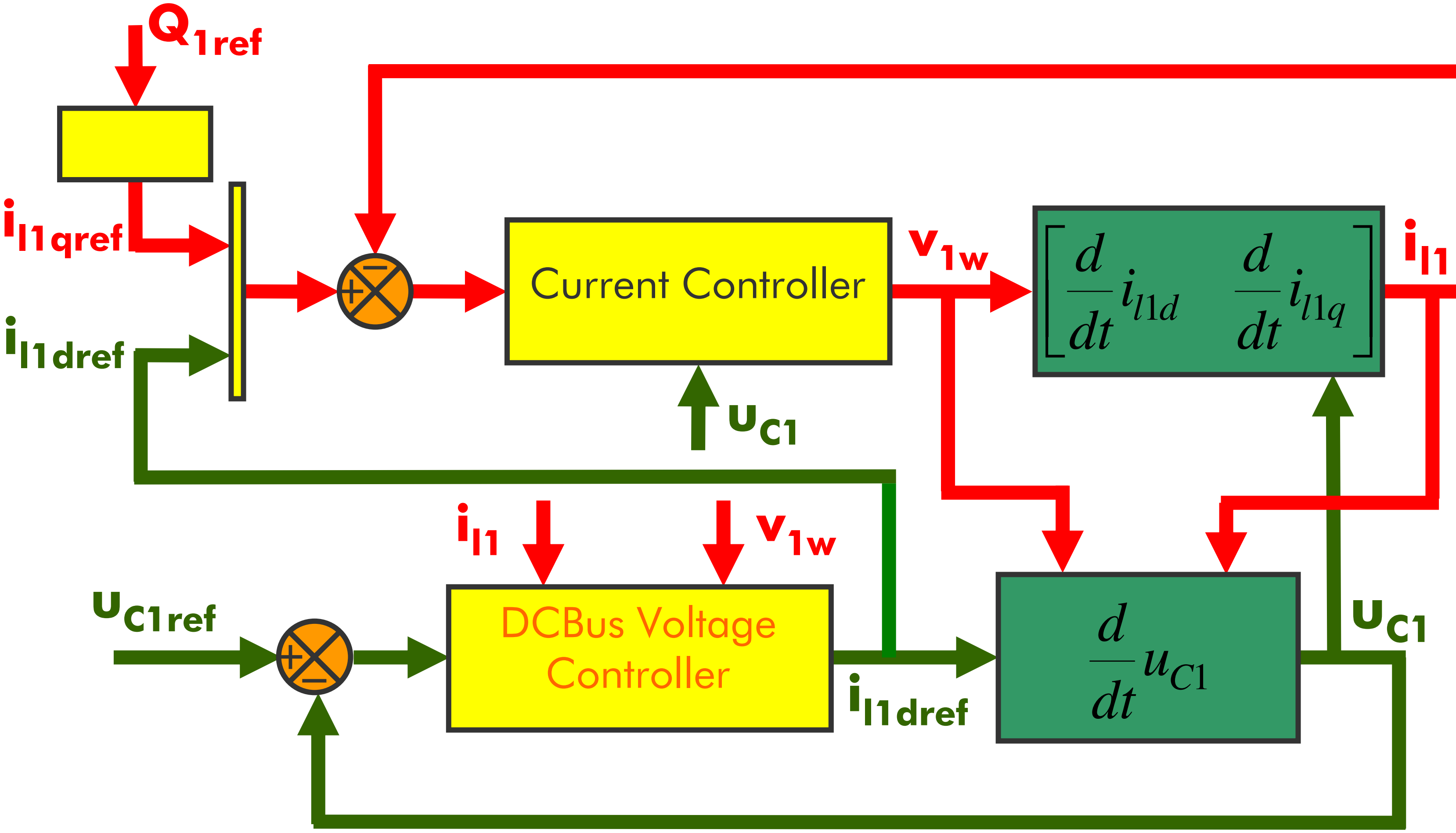

GRID | ALSTOM

VSC-HVDC: Control synthesis (Station 1)

Fast dynamics control loop

1. Linearisation and decoupling: Nonlinear state Feedback

$$\begin{cases} \dfrac{d}{dt} i_{l1d} = u_d \\ \dfrac{d}{dt} i_{l1q} = u_q \end{cases} \Rightarrow$$

Decoupled and Linearised closed-loop system

Decoupling and linearising control

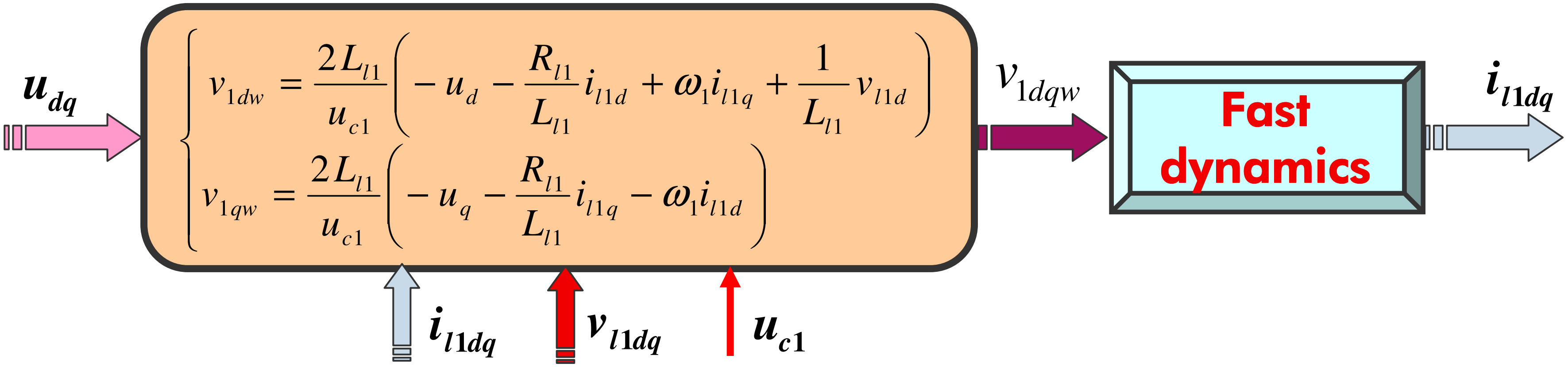

$$\begin{cases} v_{1dw} = \dfrac{2L_{l1}}{u_{c1}}\left(-u_d - \dfrac{R_{l1}}{L_{l1}} i_{l1d} + \omega_1 i_{l1q} + \dfrac{1}{L_{l1}} v_{l1d}\right) \\ v_{1qw} = \dfrac{2L_{l1}}{u_{c1}}\left(-u_q - \dfrac{R_{l1}}{L_{l1}} i_{l1q} - \omega_1 i_{l1d}\right) \end{cases}$$

VSC-HVDC: Control synthesis (Station 1)

Fast dynamics control loop (current controller)

2. Robust linear controller

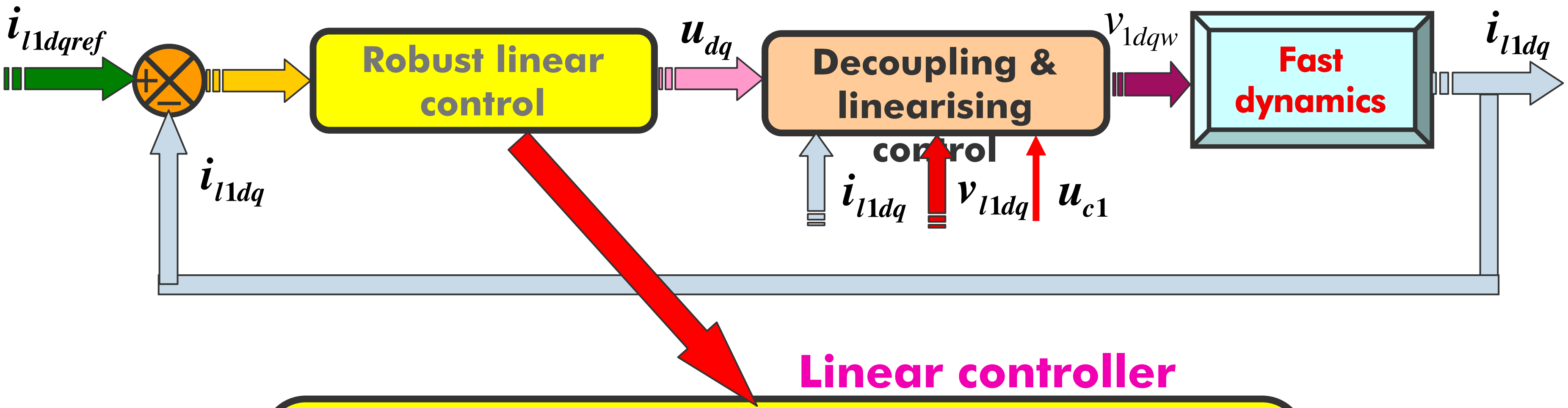

Linear controller

$$\begin{cases} u_d = k_{p1}\left(i_{l1dref} - i_{l1d}\right) + k_{i1}\int\left(i_{l1dref} - i_{l1d}\right)dt + \dfrac{d}{dt} i_{l1dref} \\ u_q = k_{p2}\left(i_{l1qref} - i_{l1q}\right) + k_{i2}\int\left(i_{l1qref} - i_{l1q}\right)dt + \dfrac{d}{dt} i_{l1qref} \end{cases}$$

VSC-HVDC: Control synthesis (Station 1)

Slow dynamics control loop (DC-Bus Voltage Controller)

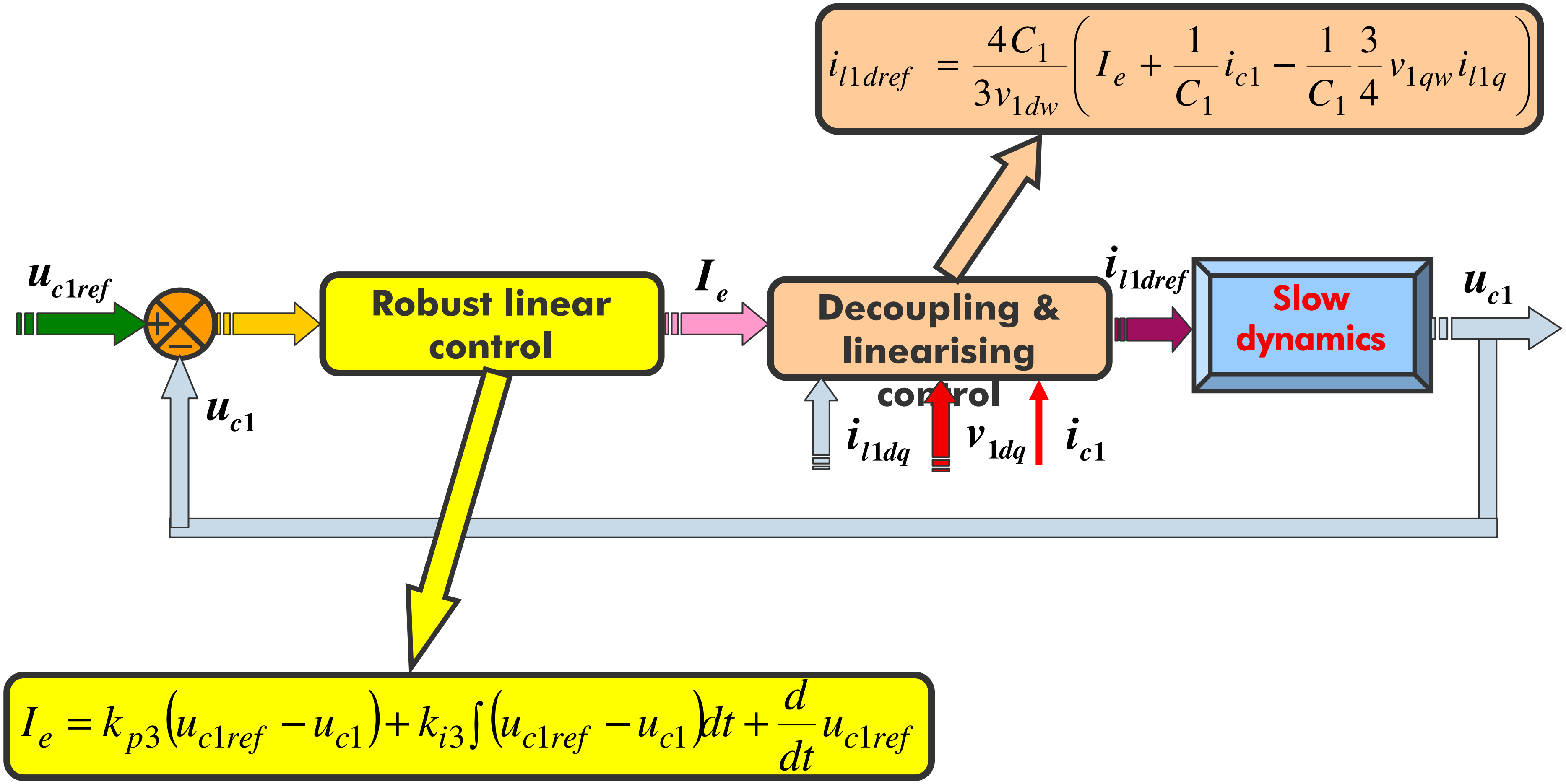

$$i_{l1dref} = \frac{4C_1}{3v_{1dw}}\left(I_e + \frac{1}{C_1}i_{c1} - \frac{1}{C_1}\frac{3}{4}v_{1qw}i_{l1q}\right)$$

u_{c1ref}

u_{c1}

Robust linear control

I_e

Decoupling & linearising control

i_{l1dq} v_{1dq} i_{c1}

i_{l1dref}

Slow dynamics

u_{c1}

$$I_e = k_{p3}\left(u_{c1ref} - u_{c1}\right) + k_{i3}\int\left(u_{c1ref} - u_{c1}\right)dt + \frac{d}{dt}u_{c1ref}$$

VSC-HVDC: Control synthesis (Station 2)

Control scheme

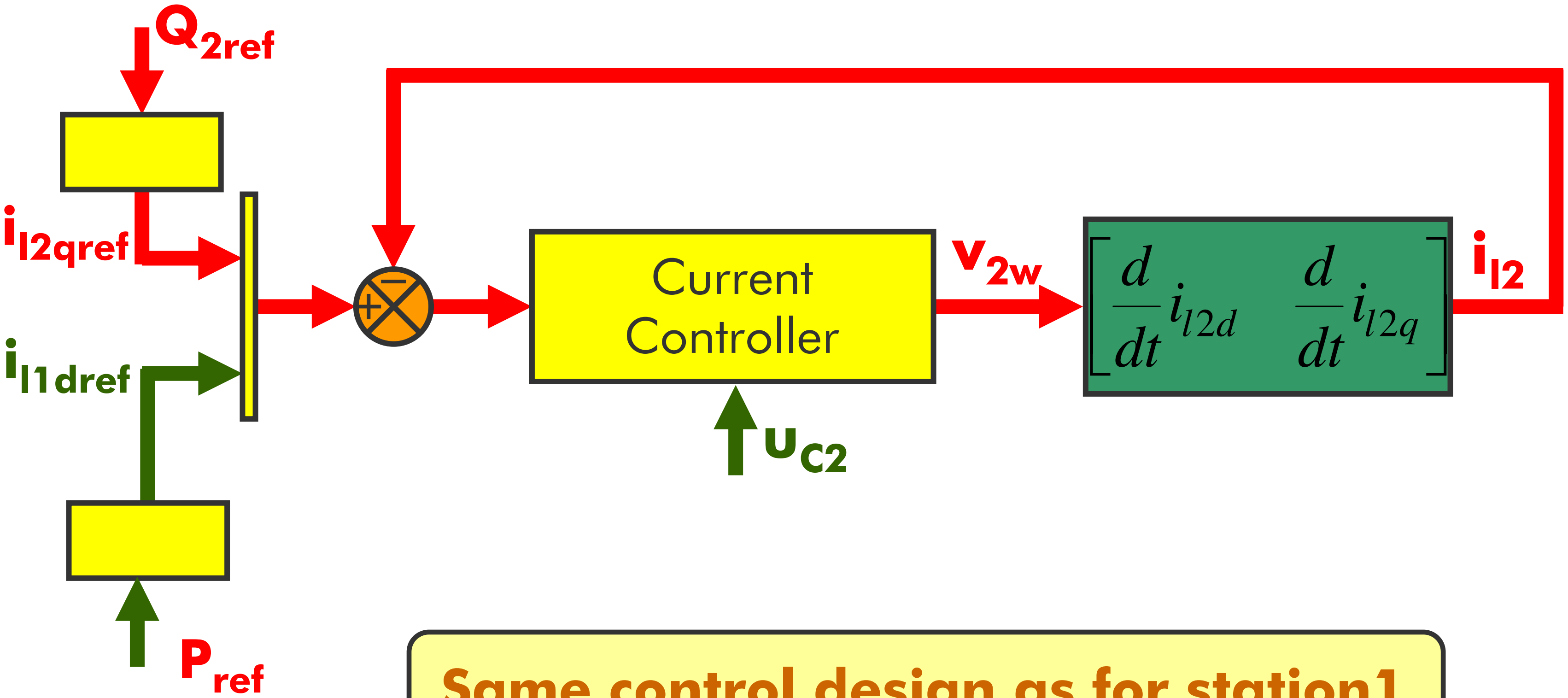

Same control design as for station1

VSC-HVDC: Simulation results (cable length 10km)

Positive power step: P= 200 MW at t=0.1s ($P_{nominal}$ = 300 MW)

Station 1 $\xrightarrow{P}$ **Station 2**

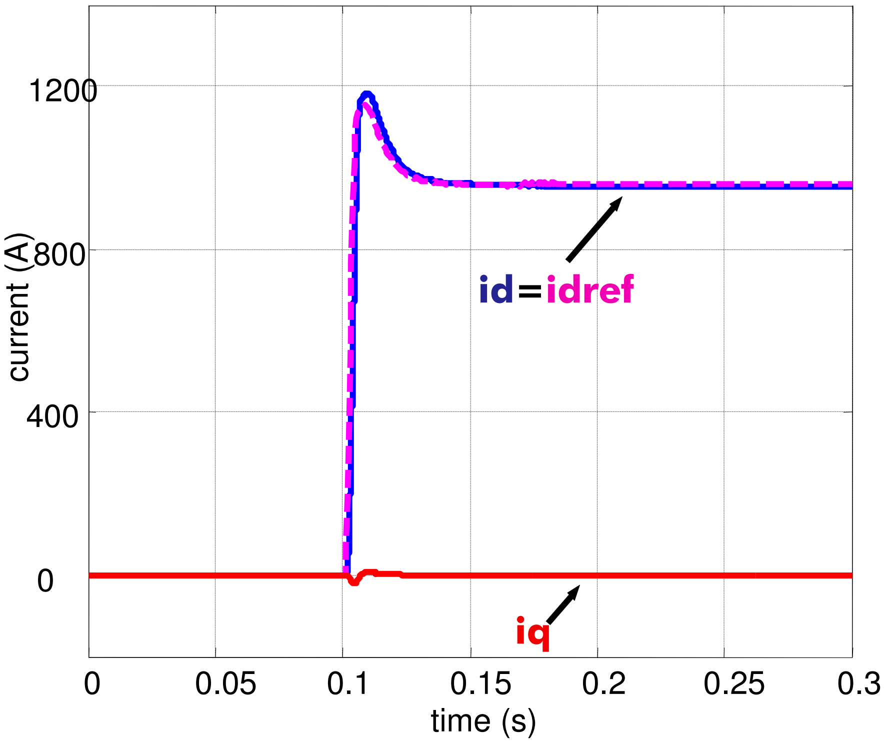

Station 1 (d,q) currents

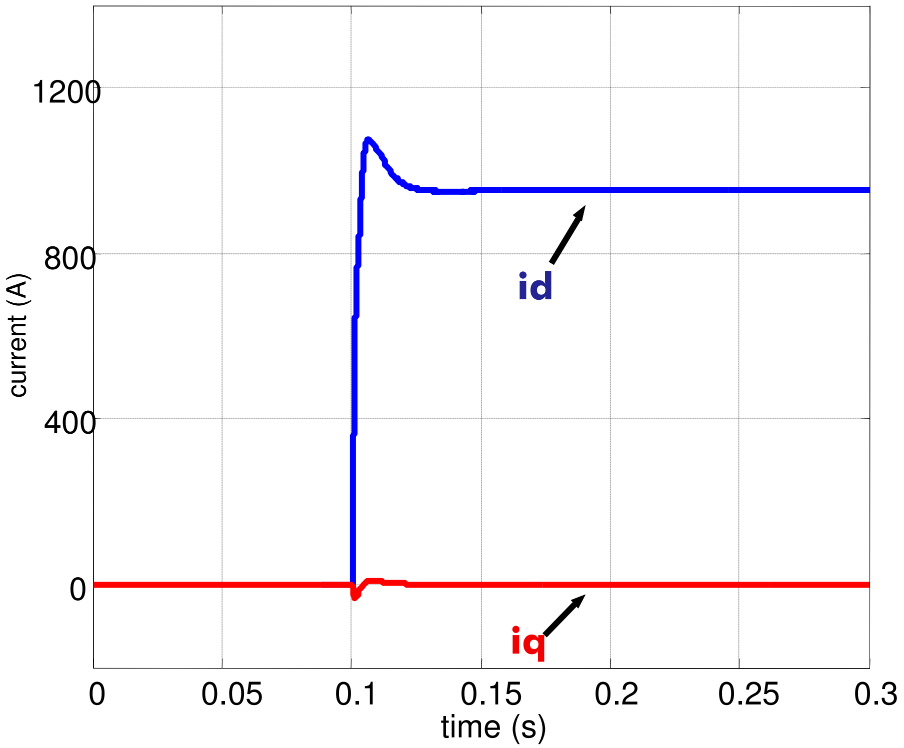

Station 2 (d,q) currents

VSC-HVDC: Simulation results (cable length 10km)

Positive power step: P= 200 MW at t=0.1s ($U_{nominal}$ = 300 kV)

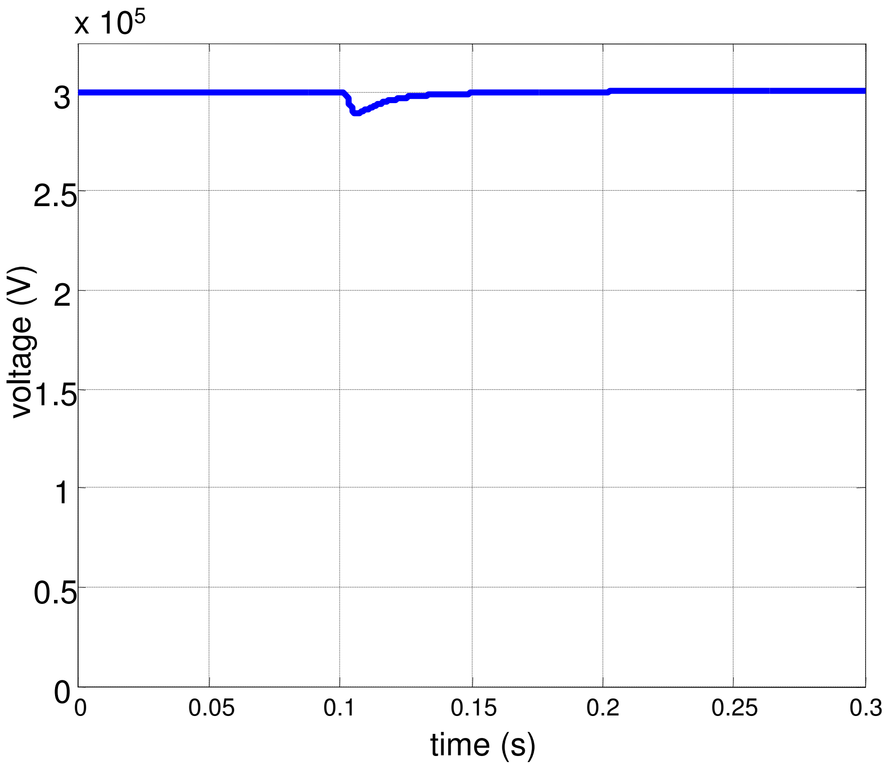

DC-Bus voltage u_{c1}

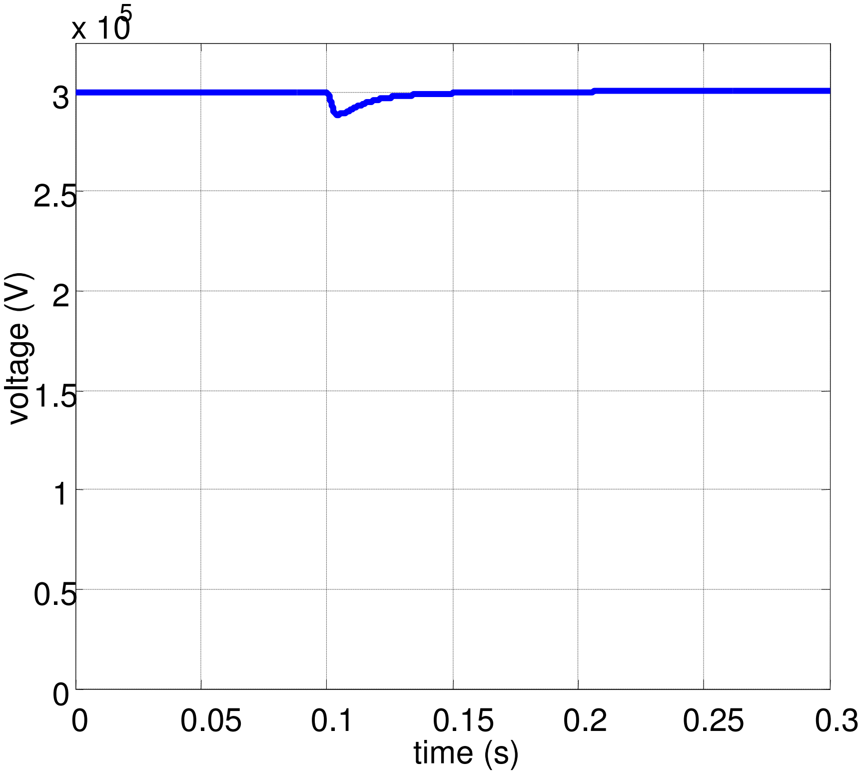

DC-Bus voltage u_{c2}

GRID | ALSTOM

VSC-HVDC: Simulation results (cable length 10km)

Negative power step: P=-200 MW at t=0.1s ($P_{nominal}$ = 300 MW)

Station 1 ← **P** **Station 2**

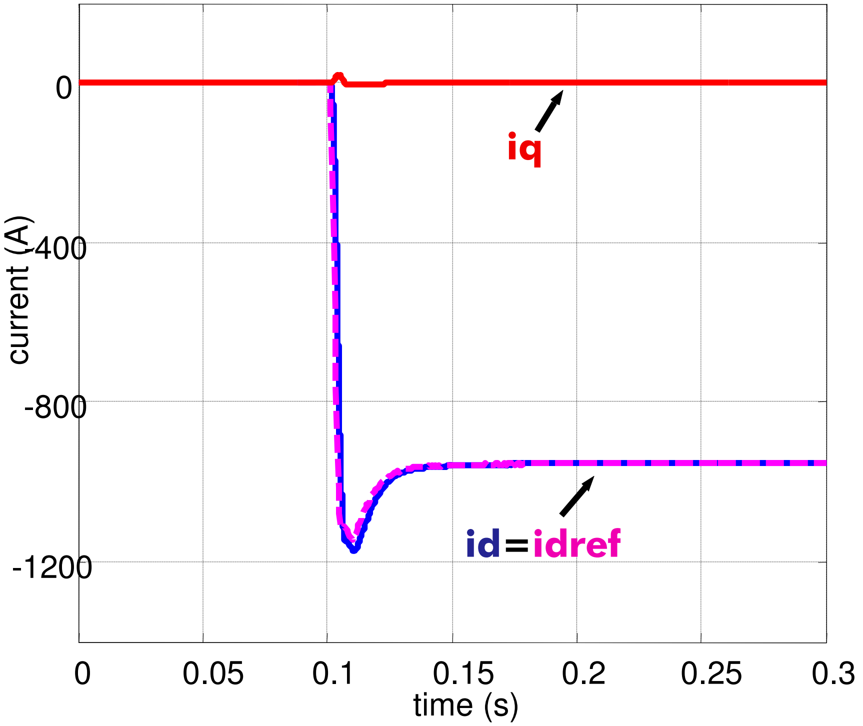

Station 1 (d,q) currents

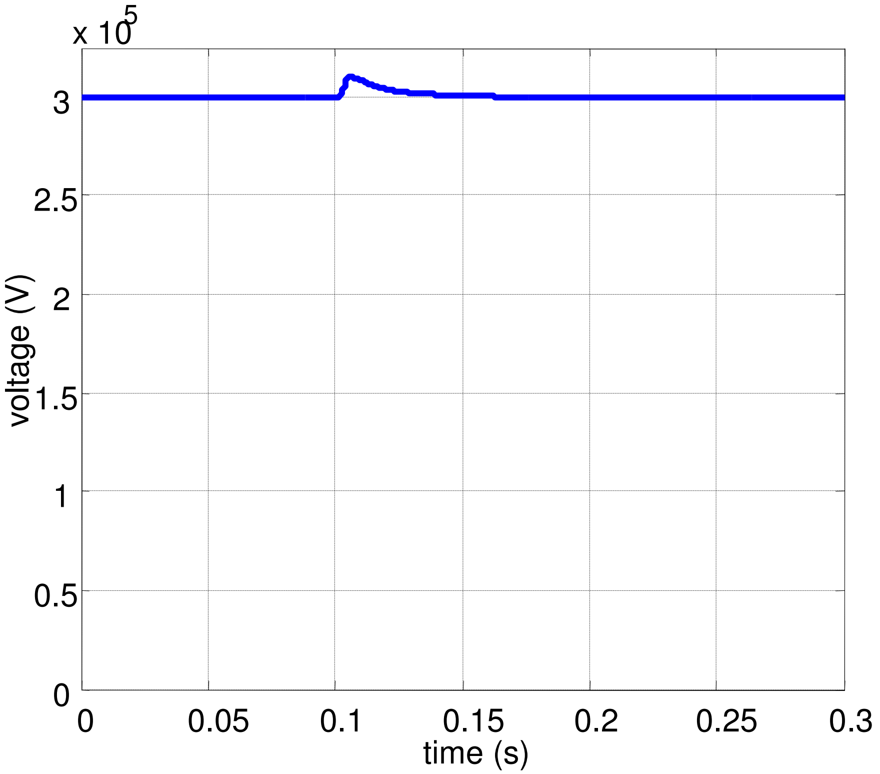

DC-Bus voltage u_{c1}

VSC-HVDC: Control structure (Station 1)–Unbalanced system

Control philosophy of station 1

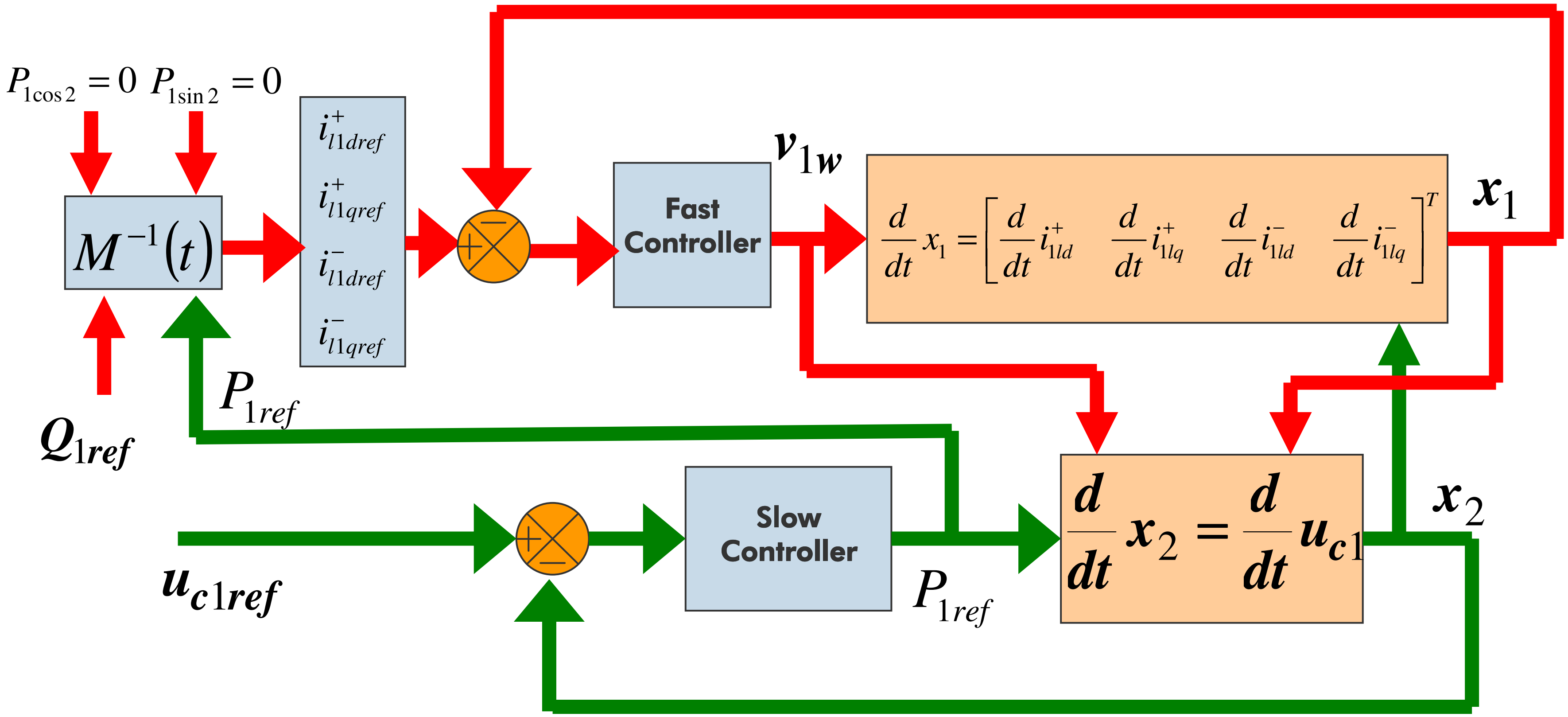

VSC-HVDC: Control structure (Station 1)–Unbalanced system

Control philosophy of station 2

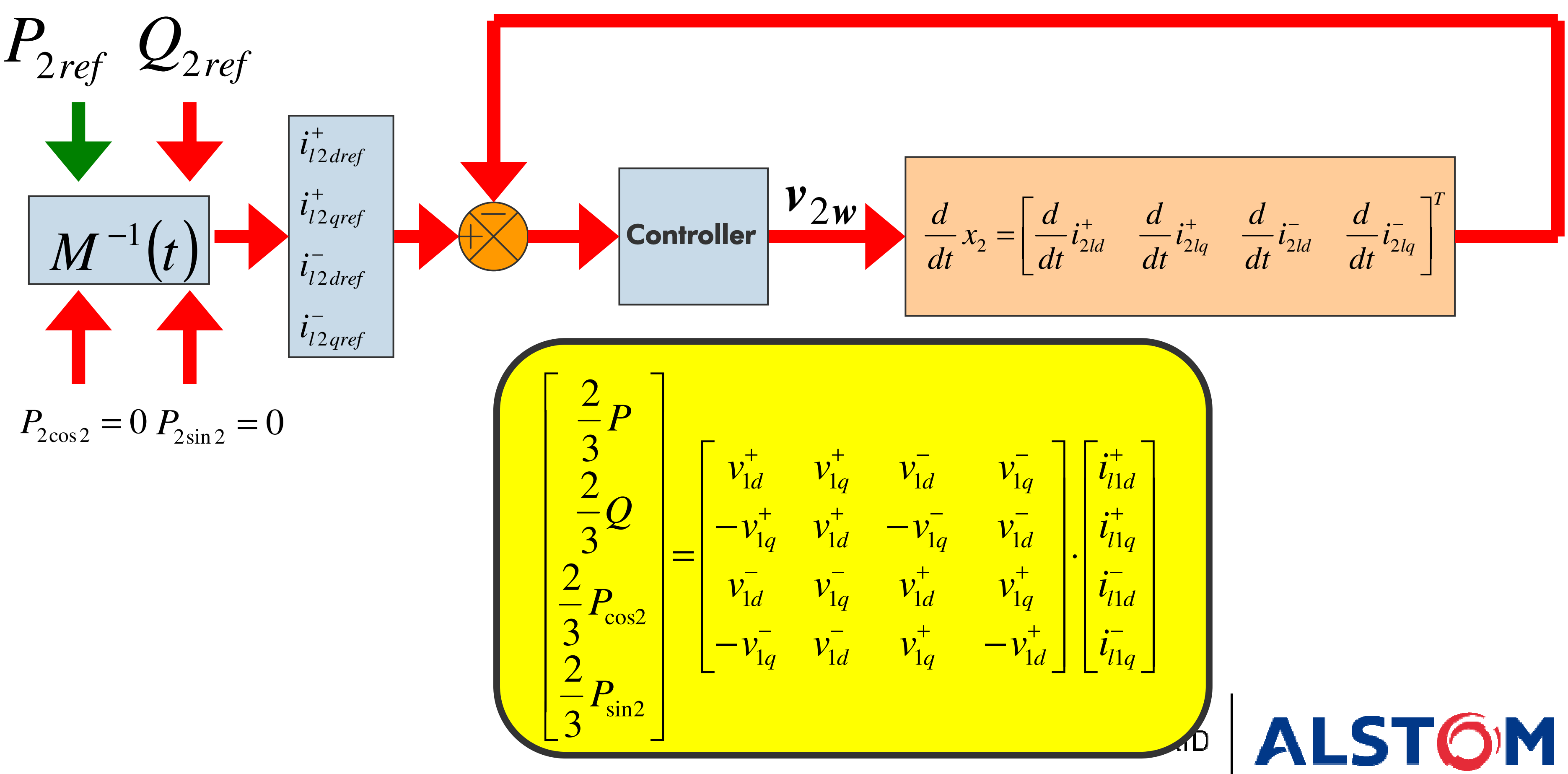

P_{2ref} Q_{2ref}

$M^{-1}(t)$

$P_{2\cos 2}=0$ $P_{2\sin 2}=0$

i^+_{l2dref}

i^+_{l2qref}

i^-_{l2dref}

i^-_{l2qref}

Controller

v_{2w}

$$\frac{d}{dt}x_2=\left[\frac{d}{dt}i^+_{2ld} \quad \frac{d}{dt}i^+_{2lq} \quad \frac{d}{dt}i^-_{2ld} \quad \frac{d}{dt}i^-_{2lq}\right]^T$$

$$\begin{bmatrix} \frac{2}{3}P \\ \frac{2}{3}Q \\ \frac{2}{3}P_{\cos 2} \\ \frac{2}{3}P_{\sin 2} \end{bmatrix} = \begin{bmatrix} v^+_{1d} & v^+_{1q} & v^-_{1d} & v^-_{1q} \\ -v^+_{1q} & v^+_{1d} & -v^-_{1q} & v^-_{1d} \\ v^-_{1d} & v^-_{1q} & v^+_{1d} & v^+_{1q} \\ -v^-_{1q} & v^-_{1d} & v^+_{1q} & -v^+_{1d} \end{bmatrix} \cdot \begin{bmatrix} i^+_{l1d} \\ i^+_{l1q} \\ i^-_{l1d} \\ i^-_{l1q} \end{bmatrix}$$

VSC-HVDC: Simulation results (cable length 10km)

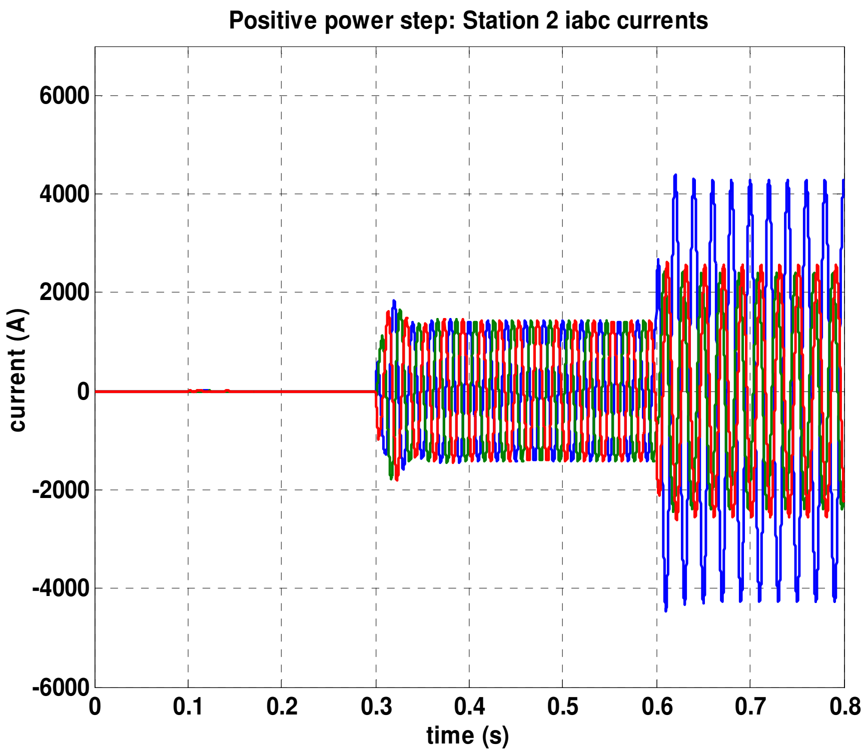

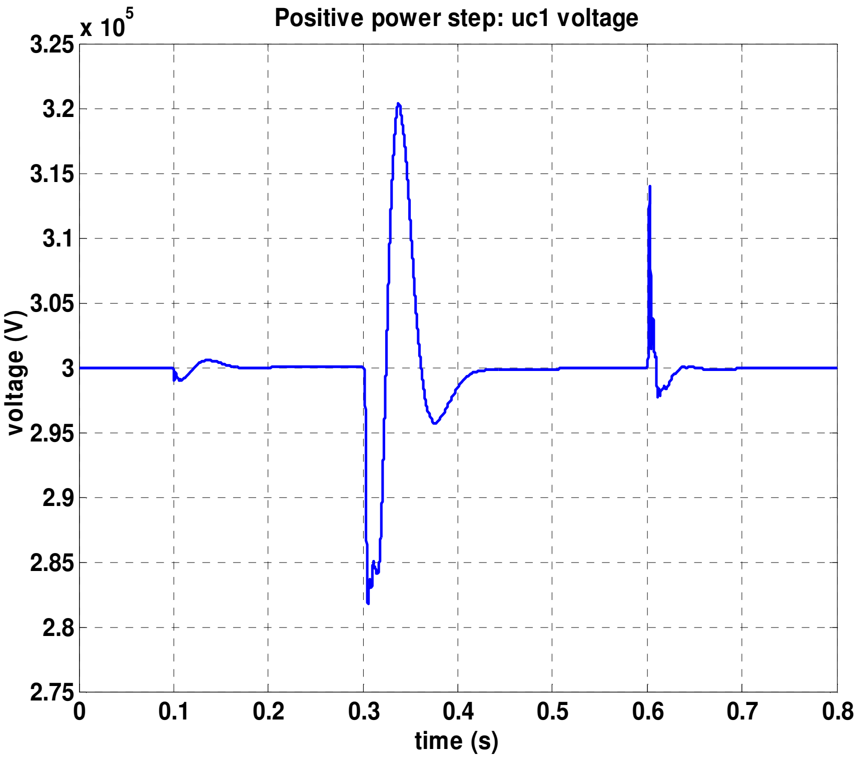

GRID ALSTOM

VSC-HVDC: Influence of the DC cable

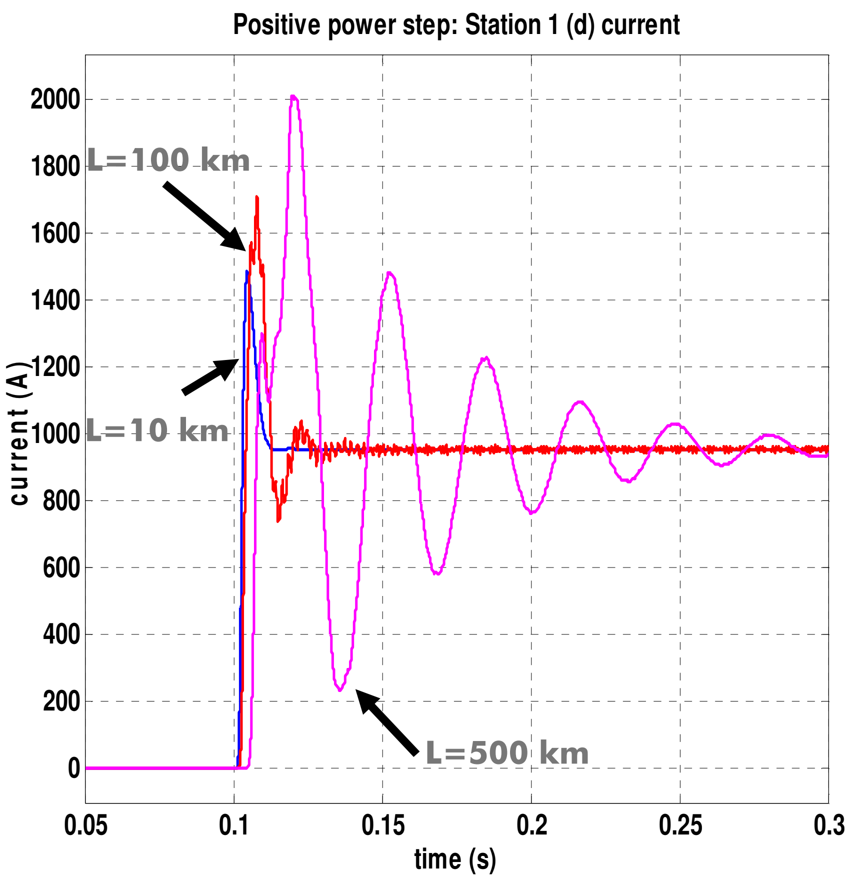

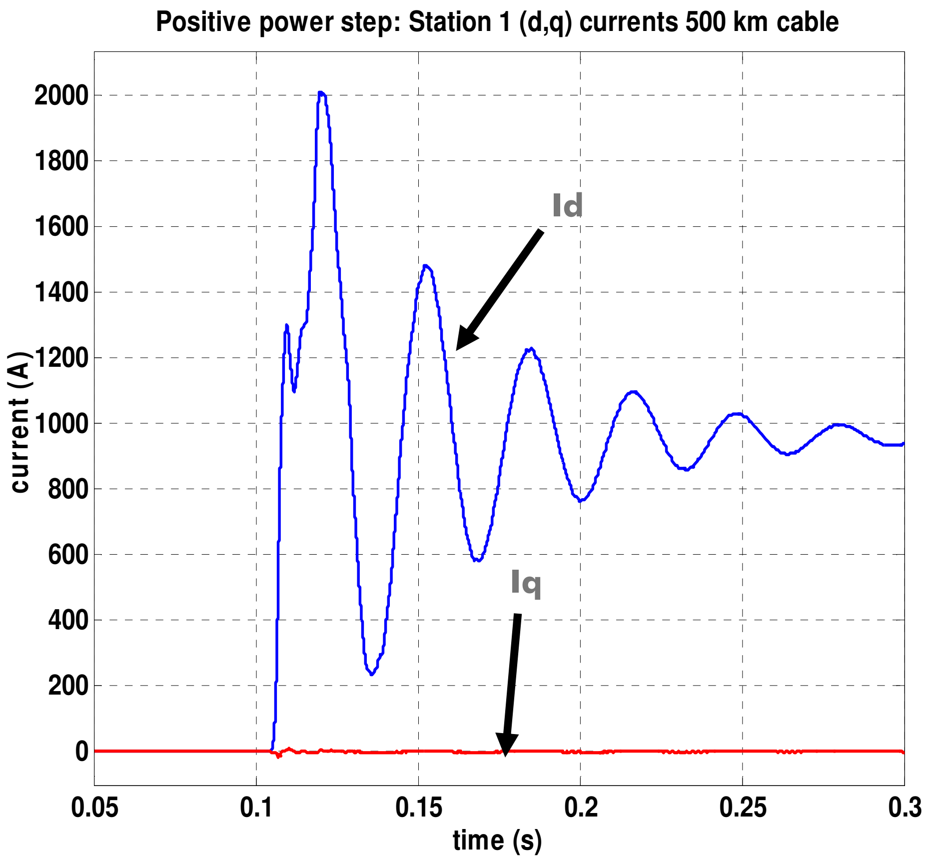

GRID ALSTOM

VSC-HVDC: sub-systems interconnection

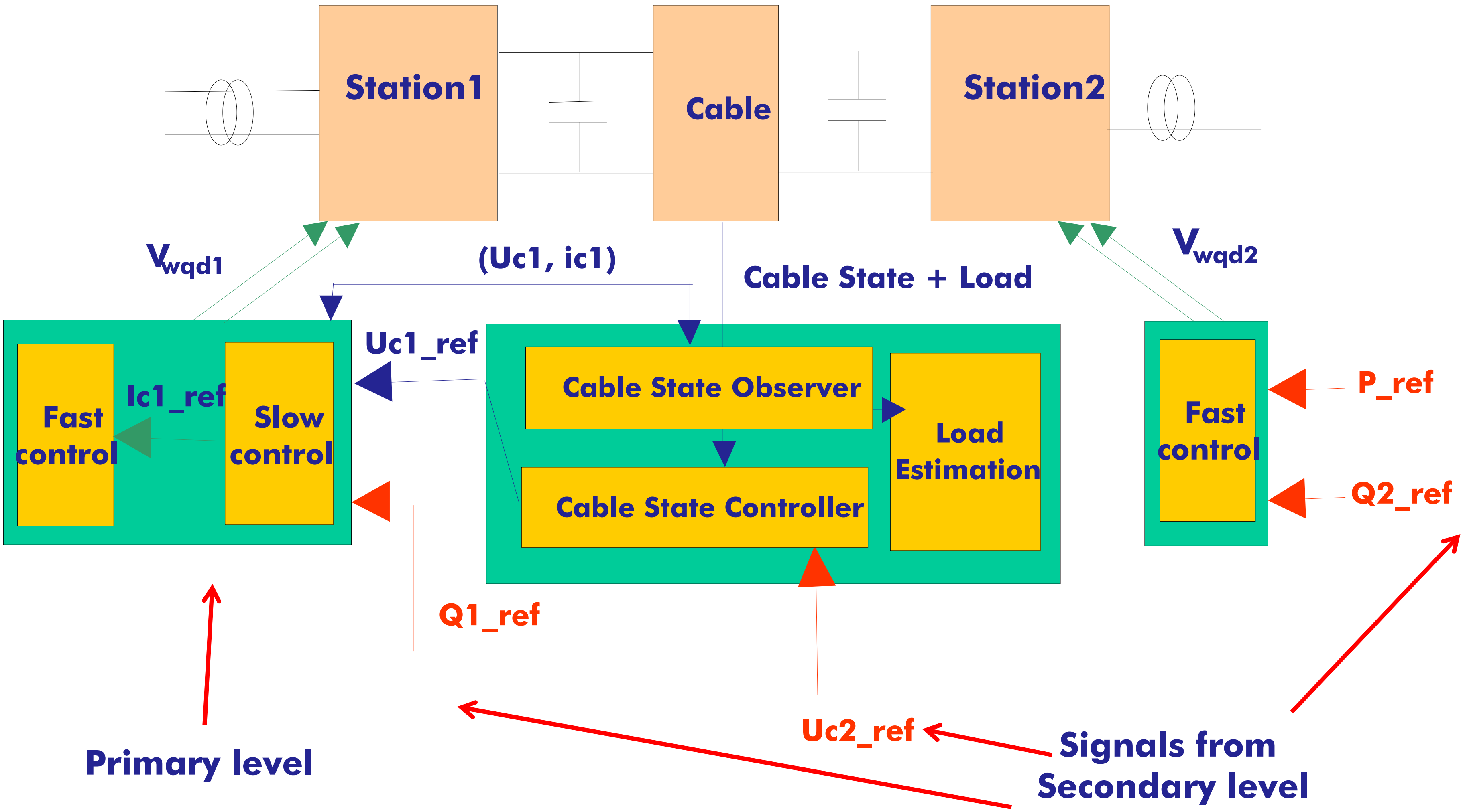

Multiple time scales → Solution for DC grid control

VSC-HVDC: sub-systems interconnection

Simulation results: 200MW positive power step

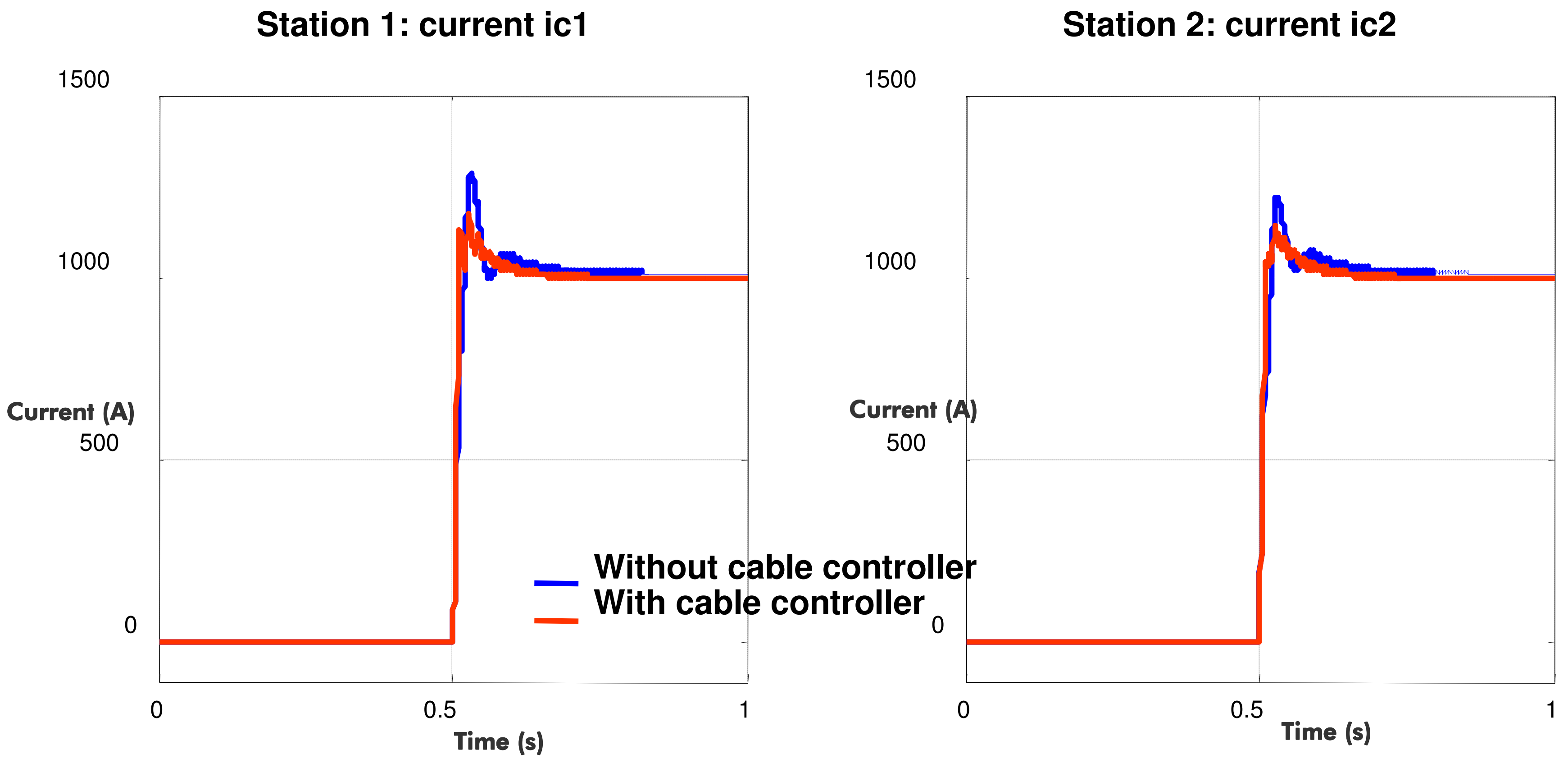

VSC-HVDC: sub-systems interconnection

Simulation results: 200MW positive power step

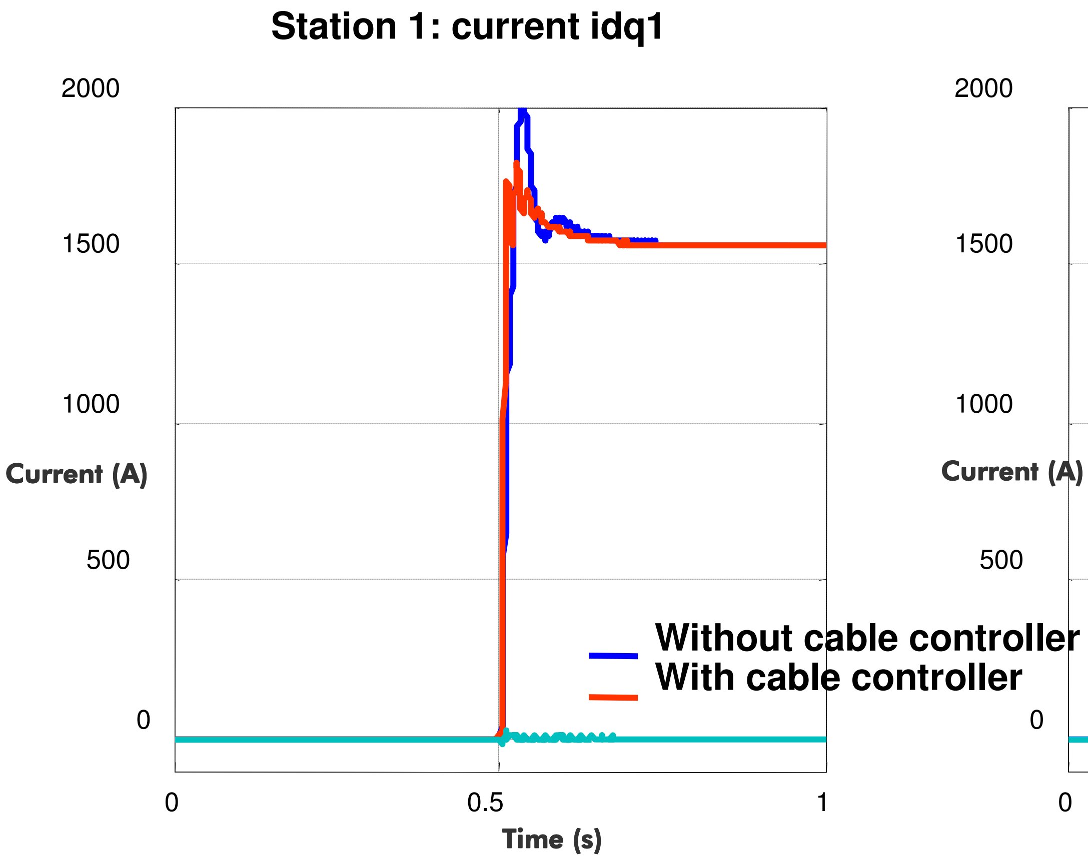

Plan

GRID | ALSTOM

Recalls - Control – AC Network

Space and time scale system

From control point of view: System of systems

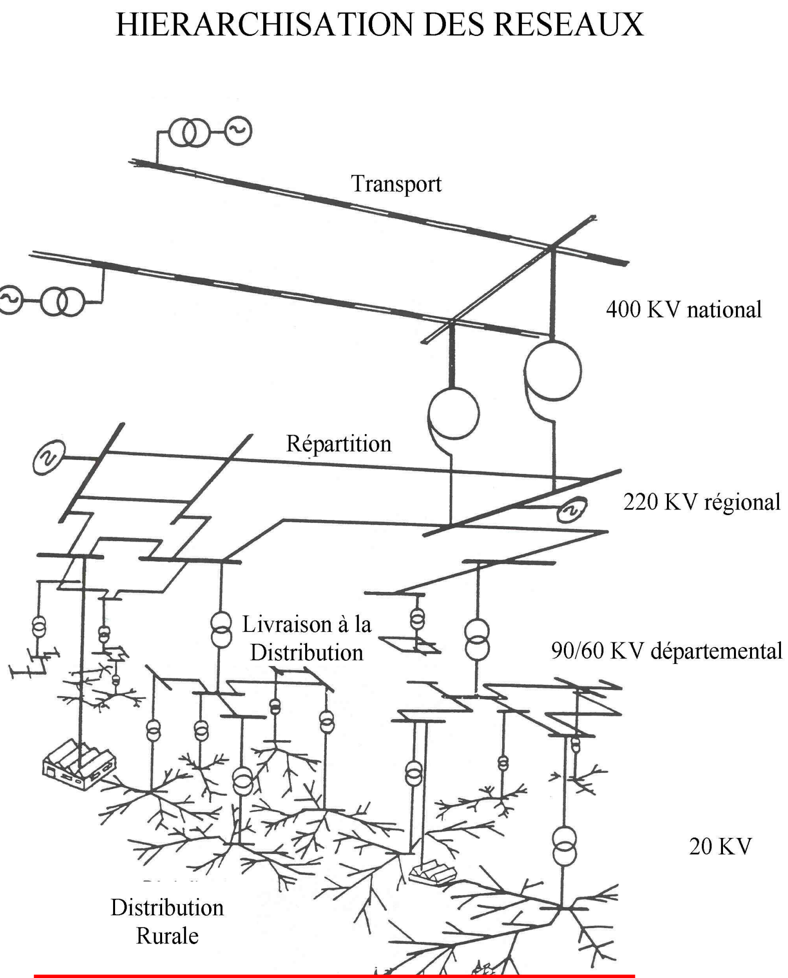

Plug & Play system already exists in AC network

Power Grid Control

Should satisfy 3 conditions ton ensure power flow.
Each time, we should respect:

(1) : Generated Power = Consumed Power
(2) : F = F0 ± 0.5Hz
(3) : V = Vref ± 5%

Transmission Network frequency control (same for voltage control)

Local control (ms) : Generator control, node

Primary control (s) – global control but **distributed control**
Real time control via statism (droop) – each generator (node) is assigned with statism (ki) and know how much power to inject into the grid ➔ **ΔP = ki/K ΔF**

Secondary control (mn) – global control – for F=Fref, new references calculation ➔ **Pi=P'i**

Tertiary and Load shedding (decoupling)

Recalls – Primary control – Droop (Statism)

Each generator contributes to the primary control follows:

$$K_i = -\frac{\Delta P_i}{\Delta F}$$

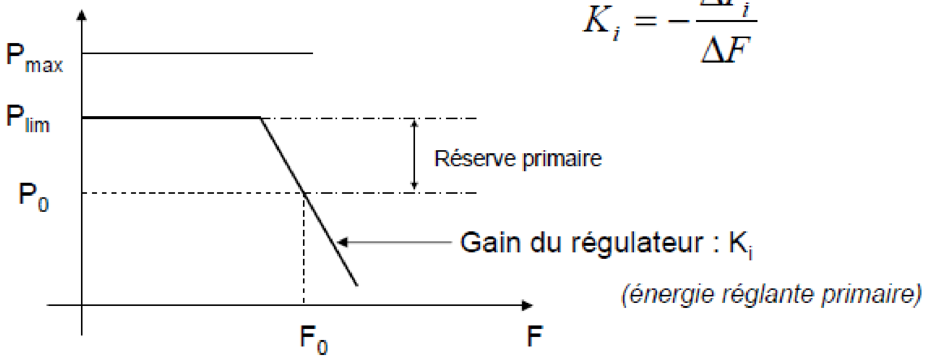

The droop is defined as:

$$\frac{\Delta P_i}{P_{nom}} = -\frac{1}{s_i}\frac{\Delta F}{F_0} \qquad s_i = \frac{1}{K_i}\frac{P_{nom}}{F_0}$$

Case of network with N interconnected generator:

$$K_i = -\frac{\Delta P_i}{\Delta F} \qquad s_i = \frac{1}{K_i}\frac{P_{nom\,i}}{F_0}$$

Each generator droop

$$\frac{\Delta P}{P_0} = -\frac{1}{s}\frac{\Delta F}{F_0} \qquad s = -\frac{\Delta F / F_0}{\Delta P / P_0} = f(s_i)$$

Network droop (statism)

$$K = \frac{1}{s}\frac{P_0}{F_0} = -\frac{\Delta P}{\Delta F} = f(K_i)$$

Network tuning energy

$$\boxed{K = \sum_i \Delta K_i}$$

Recalls – Primary control – Droop (Statism)

Power repartition between generators

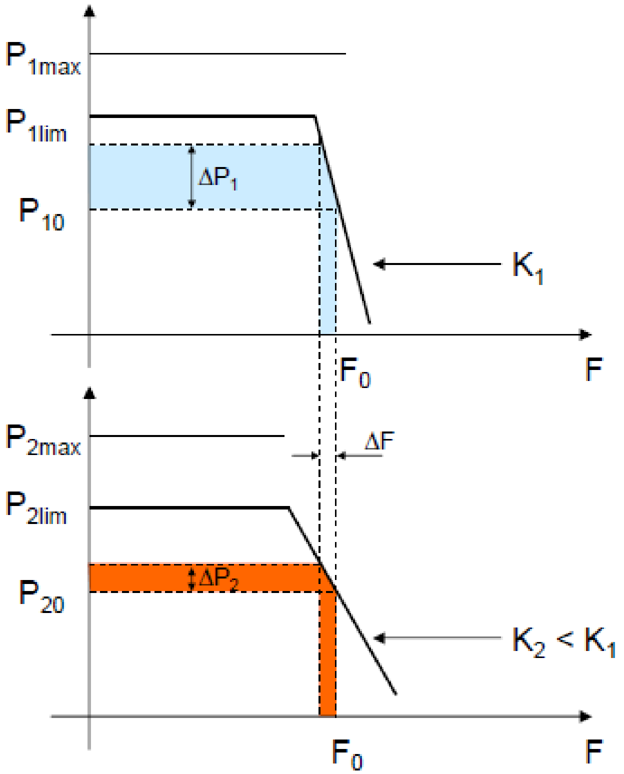

$K_2 < K_1$

⇩

$\Delta P_2 < \Delta P_1$

For N generators

$$K_i = -\frac{\Delta P_i}{\Delta F} \qquad \Delta P = \sum_i \Delta P_i = \Delta F \sum_i K_i$$

The contribution of each generator is:

$$\Delta P_i = -K_i \Delta F = -K_i \frac{\Delta P}{\sum_i K_i}$$

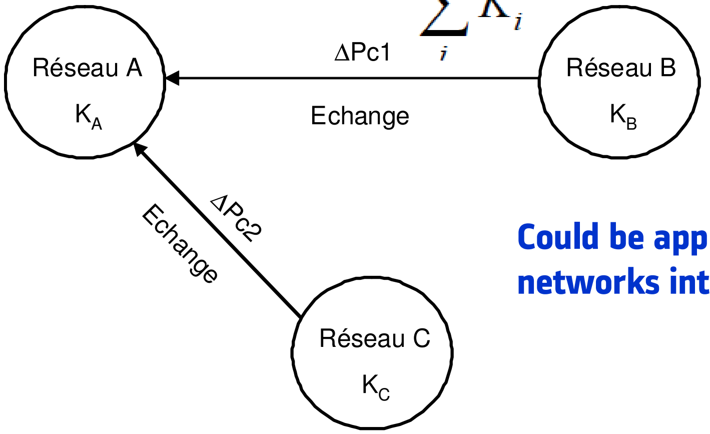

Could be applied to networks interconnection

System of systems approach

Final value automatically calculated and achieved (balanced power)

Reference variation according to system stability

Plan

Multi-terminals DC grid control strategies

The 'Master/Slave' strategy

n-1 converter are controlling their active power injection

One bus controls the DC voltage

➔ The slack bus adapts the output power automatically to compensate for the power variations in the DC system

One system operator would have to cope with all the problems on the DC grid.

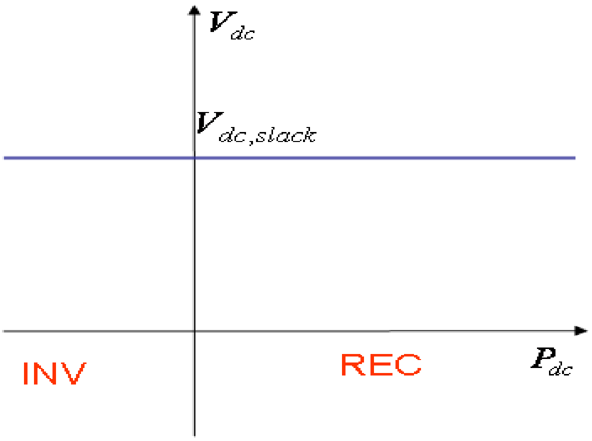

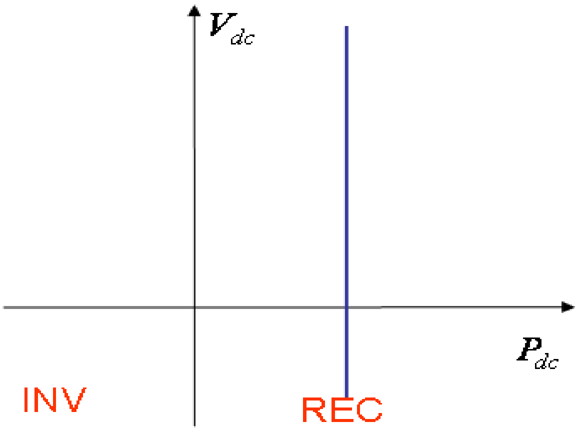

Multi-terminals DC grid control strategies

The ‘Margin control’ strategy

A converter works as slack bus until it reaches its upper or lower limit of power injection.

An other converter which works as P-controller takes over the duty of controlling the DC Voltage and becomes a slack bus, where the old slack controls the Dc power injection on its maximal or minimal value.

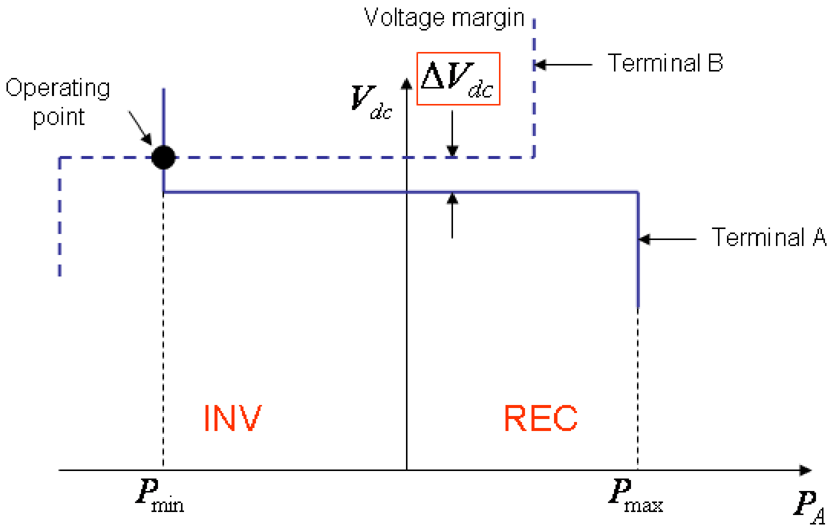

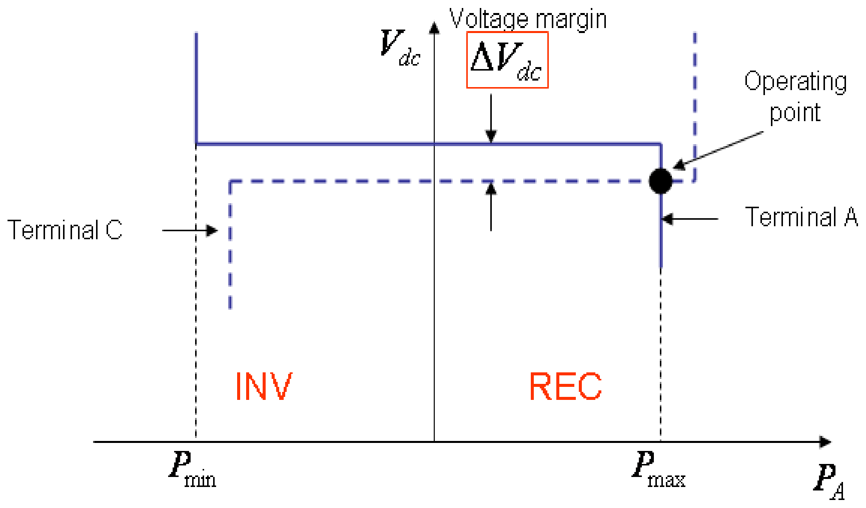

Multi-terminals DC grid control strategies

The ‘Droop Control’ (statism) strategy

Using the voltage droop control, the DC voltage control could be distributed over a number of converters, following one of the characteristics:

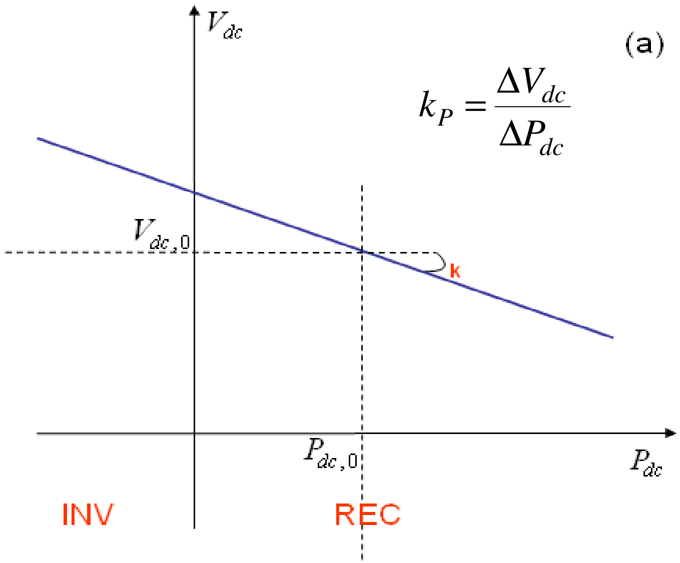

$$P_{dc,i} = P_{dc,o,i} - \frac{1}{k_i}(V_{dc,i} - V_{dc,o,i})$$

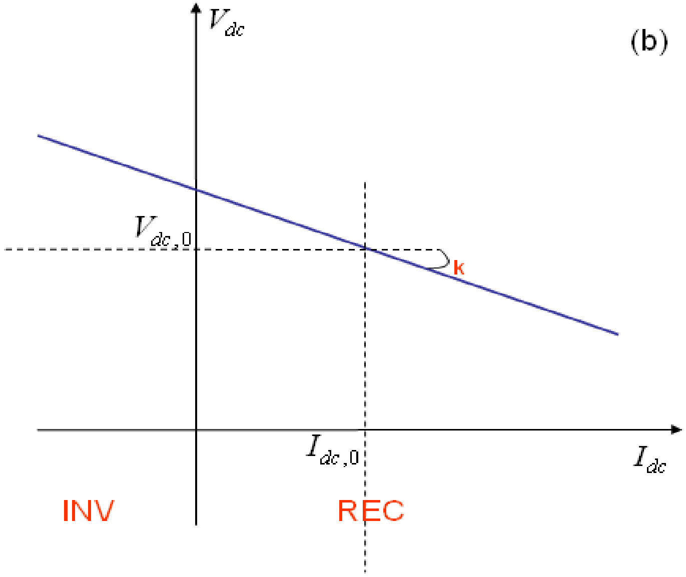

$$I_{dc,i} = I_{dc,o,i} - \frac{1}{k_i}(V_{dc,i} - V_{dc,o,i})$$

Deviation of the steady-state DC voltage levels

Multi-terminals DC grid control strategies

Dead-band-droop Control

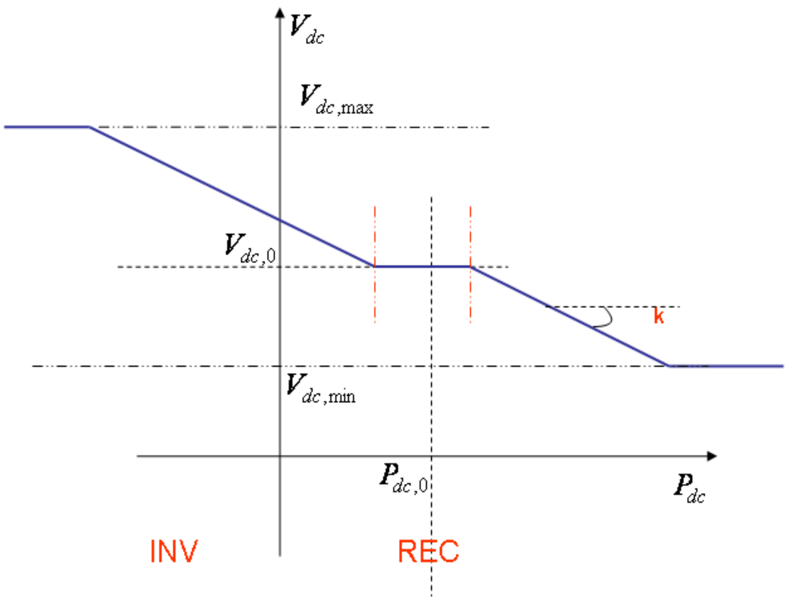

Undead-band-droop Control

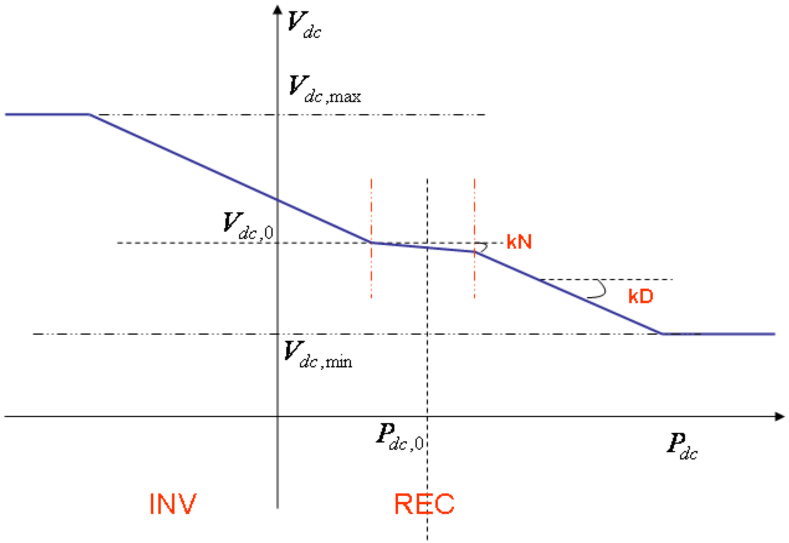

Test case: 3 nodes multi-terminals DC grid

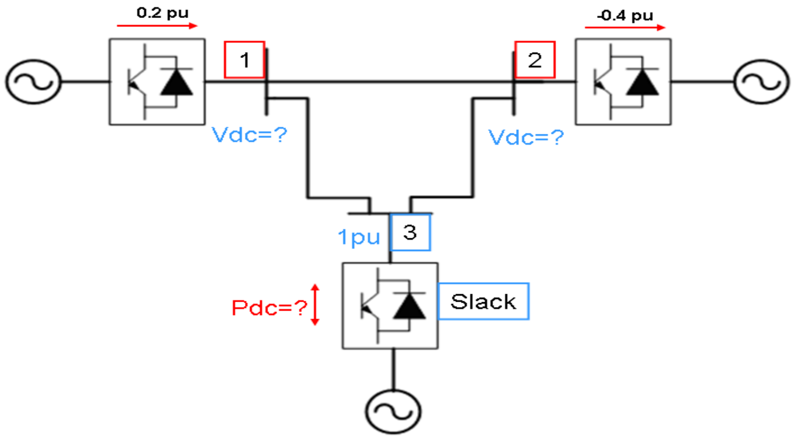

Normal Operation: without disturbances

Implementation (Matlab Code)

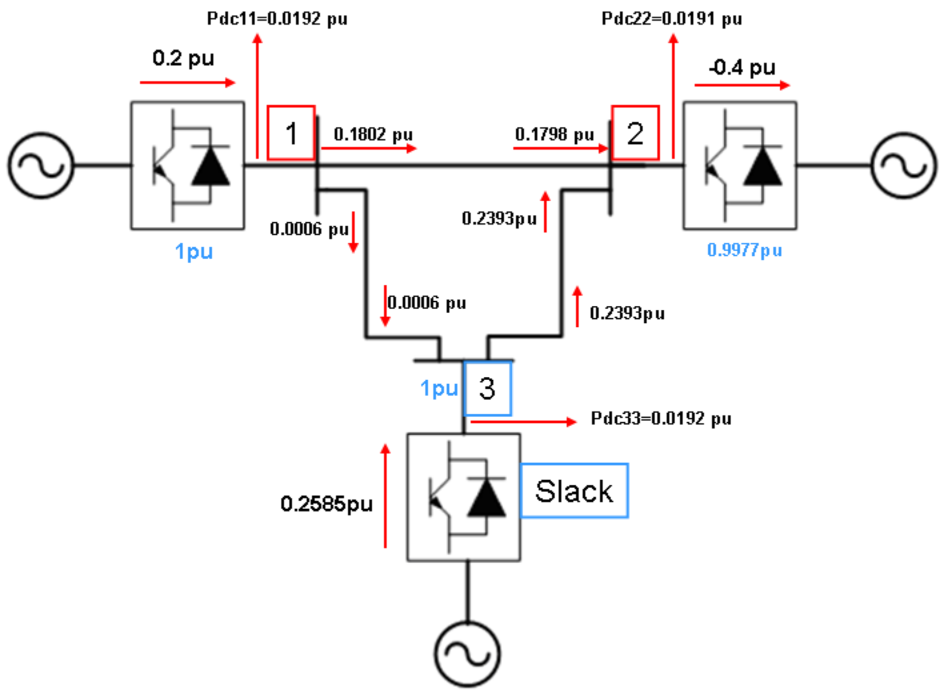

Simulation (SimPower)

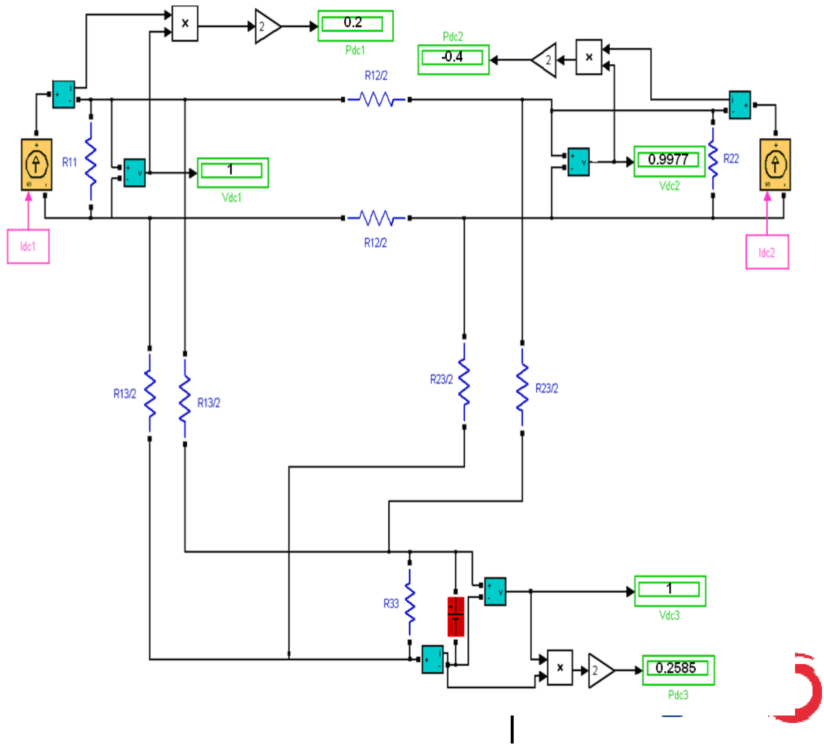

Test case: 3 nodes multi-terminals DC grid

Master/Slave, with power-Step-Change at node 1

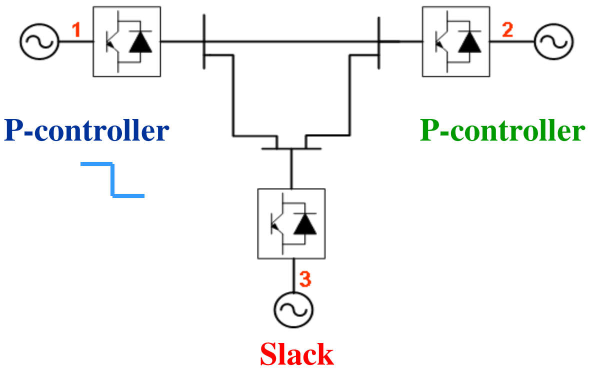

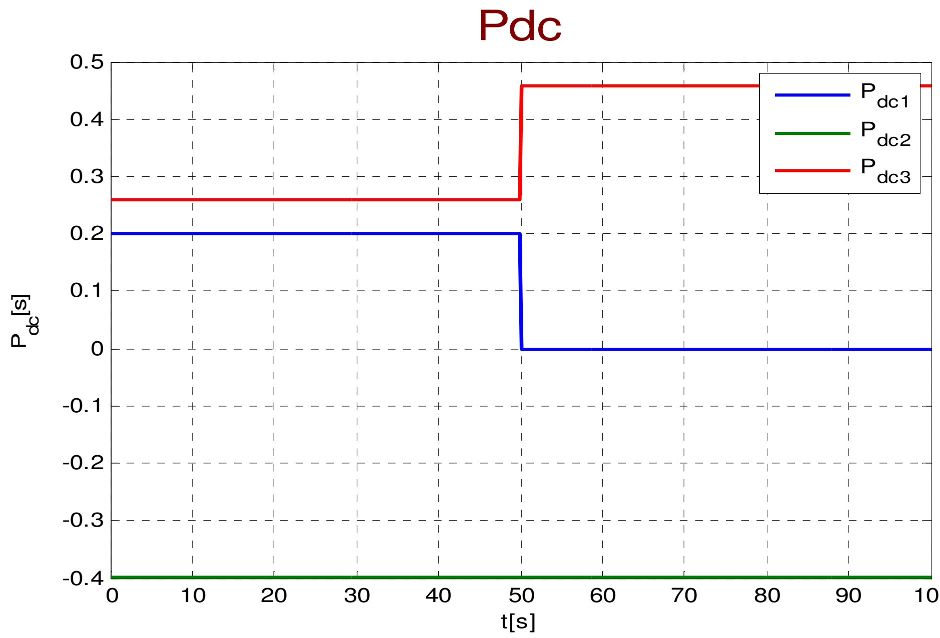

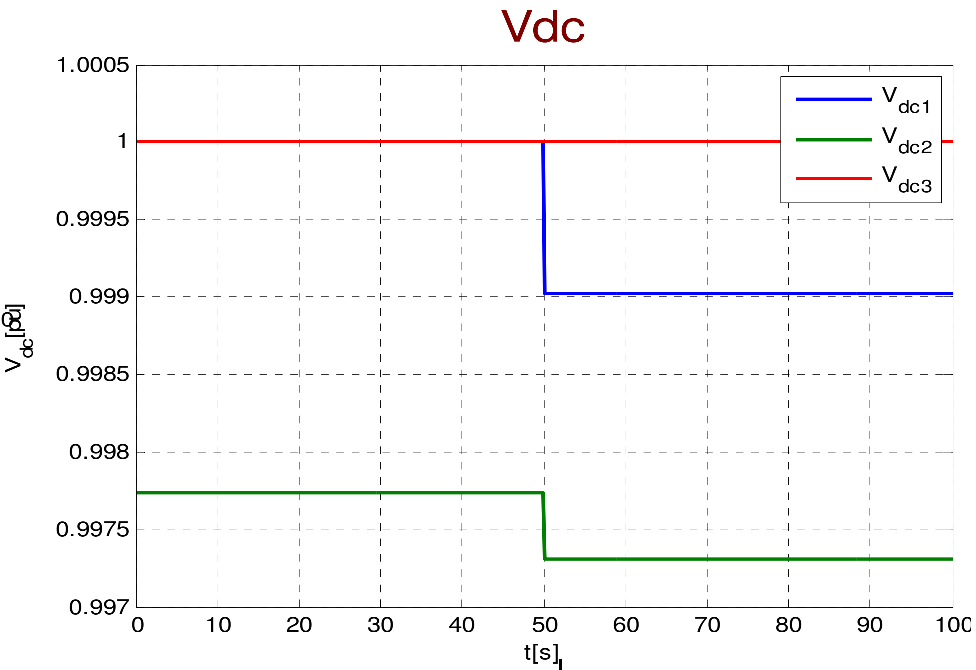

Test case: 3 nodes multi-terminals DC grid

Margin voltage Control

P_{dc}

V_{dc}

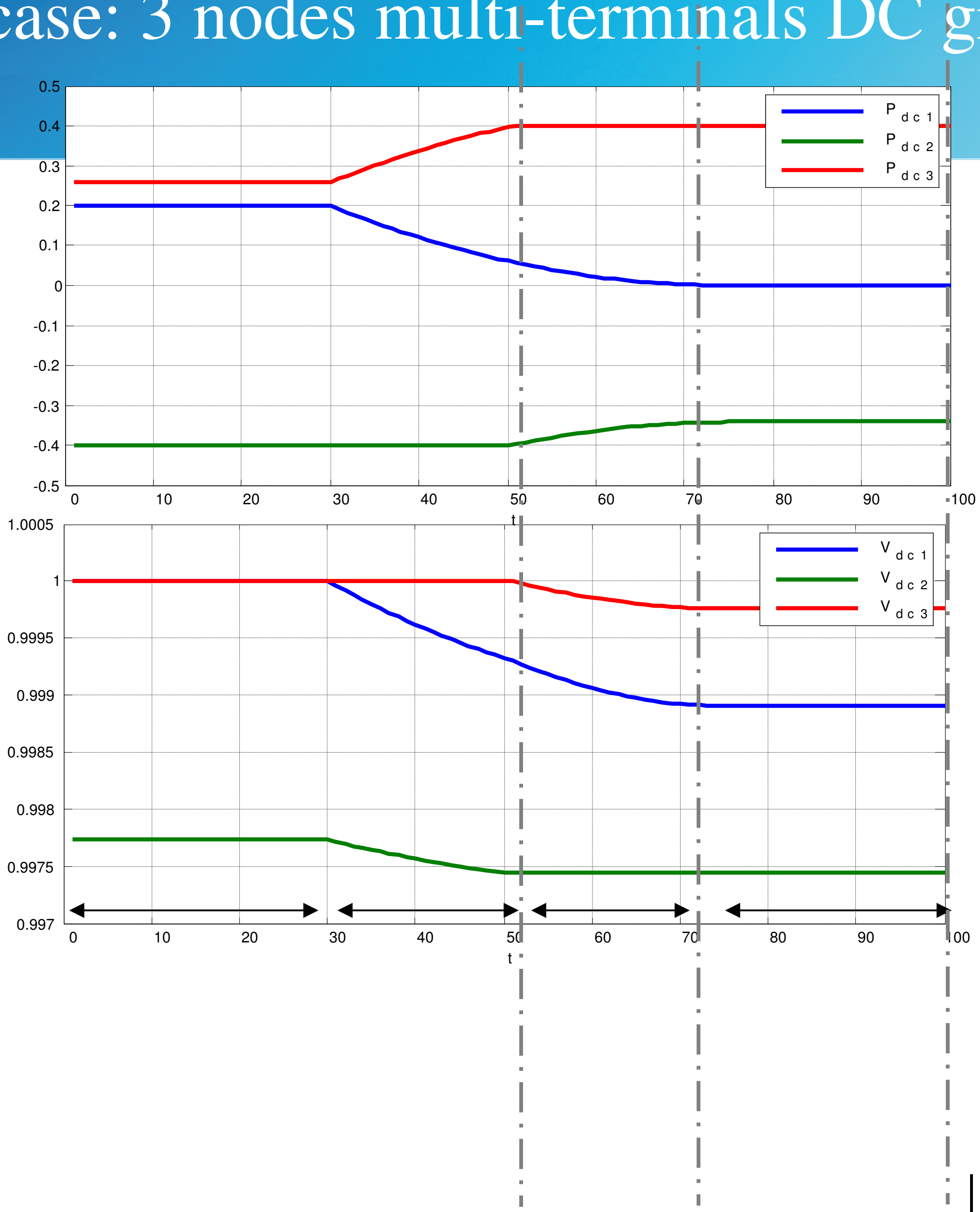

GRID ALSTOM

Test case: 3 nodes multi-terminals DC grid

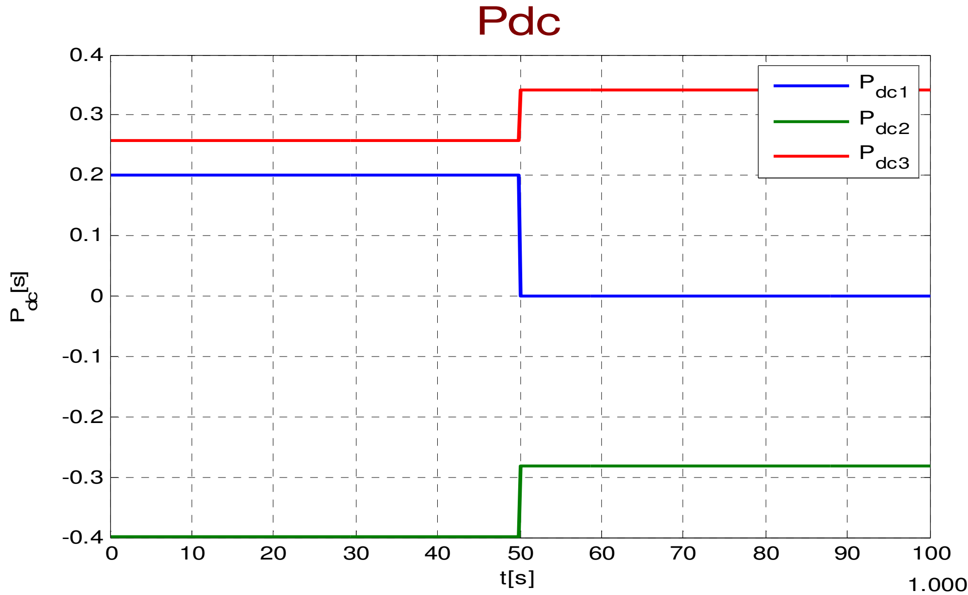

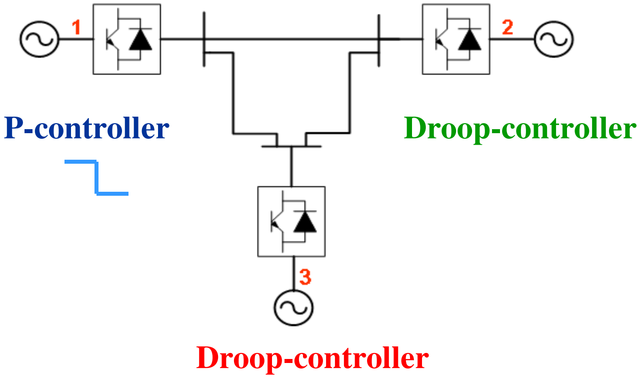

P-controller

Droop-controller

Droop-controller

Droop Control

The droop constants:

k_2=0.03

k_3=0.05

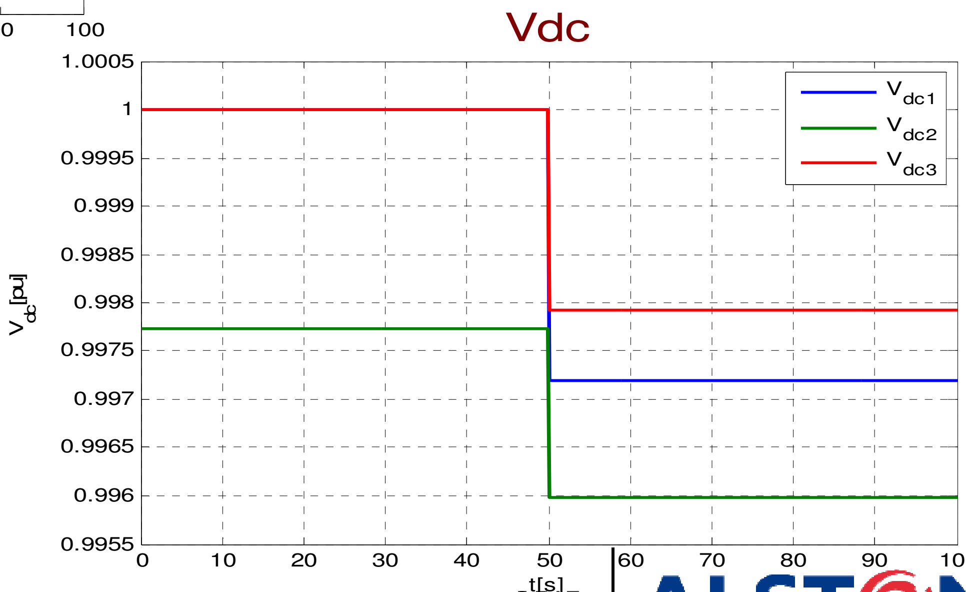

GRID | ALSTOM

Plan

Conclusion

- DC grid power grids will be part of the power network of the future
- Time scale technique is solution for system of system control with plug and play philosophy

- Protection of DC grids is a real concern
- Power electronics based devices have to be developed (DC/DC transformers, DC circuit breakers, …)
- New control techniques need to be developed for such systems (complex systems, Synchronization, Chaos, …..)

GRID ALSTOM

GRID

ALSTOM